SPEED

PRECISION

POWER

FLEXIBILITY

EFFICIENCY

RESILIENCE

VERSATILITY

COMBINATION

TECHNIQUE

PASSION

WORLD CLASS SYSTEM

In today's business environment manufacturers need a system that reduces lead time while simultaneously maximizing production possibilities.

The Robotunits Modular Automation System is based on this principle. Designed to use the least possible number of parts it combines intelligent design solutions with modern technology, and guarantees standardization and compatibility of all components. It minimizes time requirements and at the same time maximizes production possibilities and profit for top results in each discipline. It's not only about the number of single benefits, it's more about the perfect combination of each benefit within the system.

Configure and order directly online:
www.robotunits.com

Rob_Kat16.1_Inhalt_e_neu_USA.indd 4 10.06.20 14:46

A minimum of parts, a maximum of possibilities:

The World-Class-System on the principle of LEAN

A main characteristic of a conventional product range is a large number of parts: The more possibilities on offer, the higher is the number of individual parts. The Robotunits World Class product range on the principle of LEAN works differently. The number of parts is deliberately kept small, yet the number of possible solutions is remarkably high.

Conventional Product Range

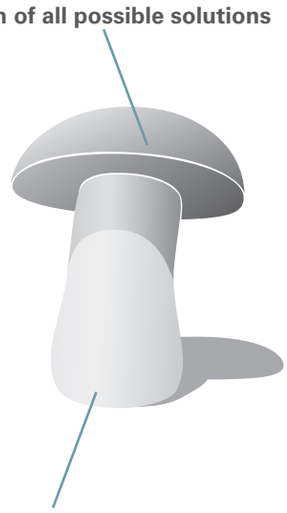

World Class Product Range

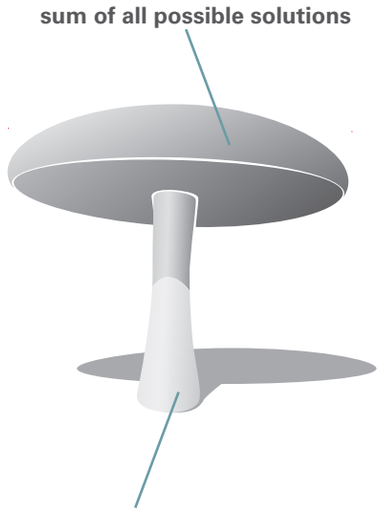

To achieve this goal, Robotunits focuses on research and development of multifunctional components that are utilized throughout the entire Modular Automation System. As a result, our customers understand our product range quickly, and the ordering process stays easy and simple. Additionally, our efficient product line reduces the storage costs for our customers to a minimum.

More with less

Our Modular Automation System helps you to achieve more results with less effort. The small number of individual parts and components make the system fast and easy applicable. This in return helps you to achieve design objectives more directly while minimizing mistakes. Implementation and logistics are simplified, which shortens the entire production process. All in all this boosts productivity, cuts costs and increases your bottom line.

Rob_Kat16.1_Inhalt_e_neu_USA.indd 5 10.06.20 14:46

SUCCESS THROUGH TOP PERFORMANCE

At Robotunits quality is the result of continuous improvement in our products and processes. Our team consists of highly motivated, top class experts, which support our customers with competent service.
Individual customer support stands out through precision and short reaction times.

A worldwide manufacturer, Robotunits delivers world-class products to our customers locally through our extensive distribution network. This ensures that our customers are supported exactly when and where they need it.

A simple ordering process ensures that products get to their destination as efficiently as possible.

Rob_Kat16.1_Inhalt_e_neu_USA.indd 6 10.06.20 14:46

Our promise, your benefit:

Outstanding Quality

Uncompromising Service

Fastest Delivery Times

ROBOTUNITS®

All products
available for you online

Visit our webshop and configure and order our standard products online.

All CAD files are available online to facilitate your design process.

Robotunits utilizes Cadenas, a versatile part management platform that allows you to individually download 3D models in various formats.

Webshop & product configurator
Configure and order

Digital CAD database
Configure and download

www.robotunits.com

The Modular Automation System

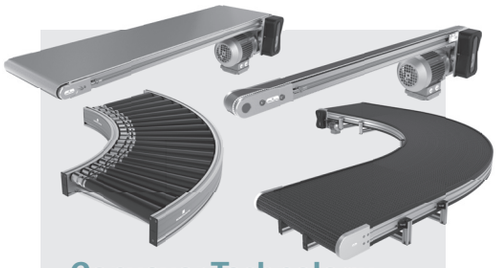

Conveyor Technology

Page 10

- Belt Conveyors
- Modular Belt Conveyors
- Timing Belt Conveyors
- Powered Roller Conveyor
- Side Guide System

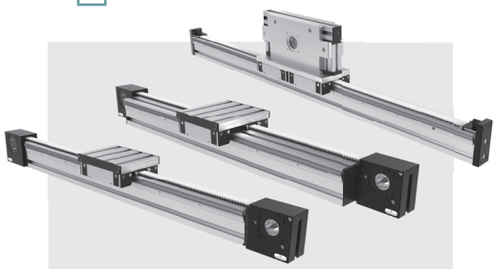

Linear Motion System

Page 54

- Linear Motion Unit 50
- Linear Motion Unit 100
- Linear Motion Unit 50 with Omega Drive

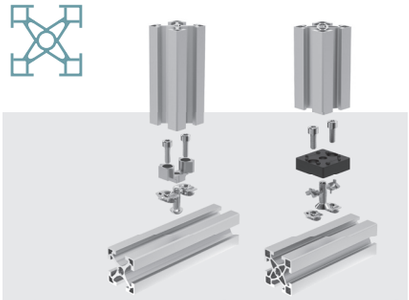

Extrusion Technology and Fastening Technology

Page 64

- 40 mm Series
- 50 mm Series

Safety Fence System

Page 92

- Basic System
- Allround System

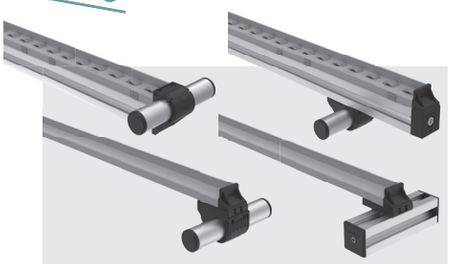

MBS PickStar

Page 112

- MBS PickStar With Rollers
- MBS PickStar With Slides

Accessories

Page 134

- Belt Conveyor Accessories
- Safety Fence Accessories
- Linear Motion Accessories
- General Modular Accessories

THE JUST-IN-TIME CONVEYOR TECHNOLOGY

ROBOTUNITS®

Success is often measured by efficiency and speed. For Robotunits customers this means always keeping one step ahead regarding the time required for delivery, design and assembly.

An important contributor to this is the fact that the Belt Conveyor System is seamlessly integrated into the Modular Automation System.

Advantages like these, as well as great product variety, maximum technical excellence and enormous potential to save time and money in design and assembly, are what makes Robotunits so unique. Special designs are available upon request.

Impressive delivery times
- production time for your individual Belt Conveyor: 1 week
- Just-In-Time delivery

Custom-made sizes
- select any standard frame width between 40 mm and 1200 mm
- select any conveyor length up to 12 m, longer units available upon request
- pre-assembled and height adjustable legs as an option
- fast adjustments to meet your individual requirements

Flexibility in drive options and positions
- choose drive option and position of motor
- maintenance-free timing belt drive
- space saving direct drive

Speed
- standard speed ranges from 2.6 m/min to 58 m/min
- higher speeds available upon request
- Speed Controller optional

Idler options
- roller diameters of 40 mm, 50 mm or 80 mm
- nose bar (16 mm diameter) for transfer of small parts

Wide variety of belts
- accumulation belt
- low & high friction belts
- high durability belts for abrasive and corrosive use

Fully integrated conveyor system
- compatible with all our extrusion sizes
- frame built with standard extrusion system
- accessible T-slot on 3 sides of the conveyor frame
- this makes it quick and easy to attach accessories or structural elements (i.e. stops) to the machine frame

Save time, cut cost
- shortest lead time
- quick configuration of your custom conveyor
- every Belt Conveyor comes fully assembled and tested
- outstanding price/performance ratio

Safety
- self-adjusting safety guard between the Belt Conveyor roll and the slider bed
- timing belt guard with window for visual inspection
- complete documentation meeting the latest Machinery Directive

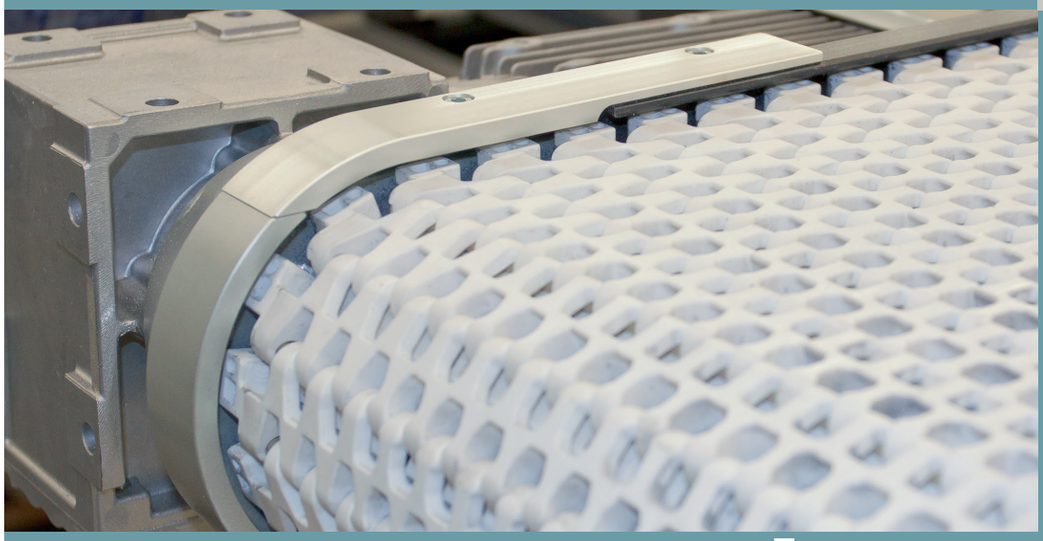

ROBOTUNITS®

Just-In-Time Conveyor Technology

Belt Conveyor — Page 14

Belt Conveyors 40
C4N

P. 16

Belt Conveyors 50
C5N
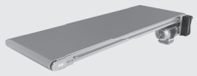
P. 18

Belt Conveyors 80
C8N

P. 20

Conveyor Stand
40/50
C4F

P. 22

Conveyor Stand
80
C8F

P. 23

Modular Belt Conveyors — Page 24

Straight Modular
Belt Conveyors
C8M

P. 26

Curved Modular
Belt Conveyors
C8M

P. 28

Conveyor Stand
80
C8F

P. 23

Timing Belt Conveyors — Page 30

Timing Belt
Conveyors 40
C4T

P. 32

Timing Belt
Conveyors 80
C8T

P. 34

Conveyor Stand
40
C4G

P. 36

Conveyor Stand
80
C8G

P. 37

Powered Roller Conveyor — Page 38

Powered Roller
Conveyor Straight
R5S

P. 42

Powered Roller
Conveyor Curved
R5C
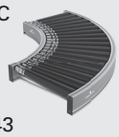
P. 43

Transfer Unit 90°
R5T

P. 44

Turntable
R5R

P. 45

Roller Conveyor
Stand R5F / R5G

P. 46 / 47

Side Guide System — Page 48

Side Guide Base
COP 4561

P. 50

Side Guide Clamp
With Rod
CO_ 900_

P. 51

Side Guide Clip
COP 4570
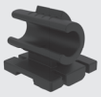
P. 52

Side Guide End
Piece
COP 4590

P. 52

Side Guide Plastic
COL 4590
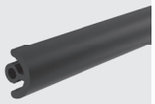
P. 53

Conveyor Technology Accessory Overview — Page 136

C4N Belt Conveyor Drive Options

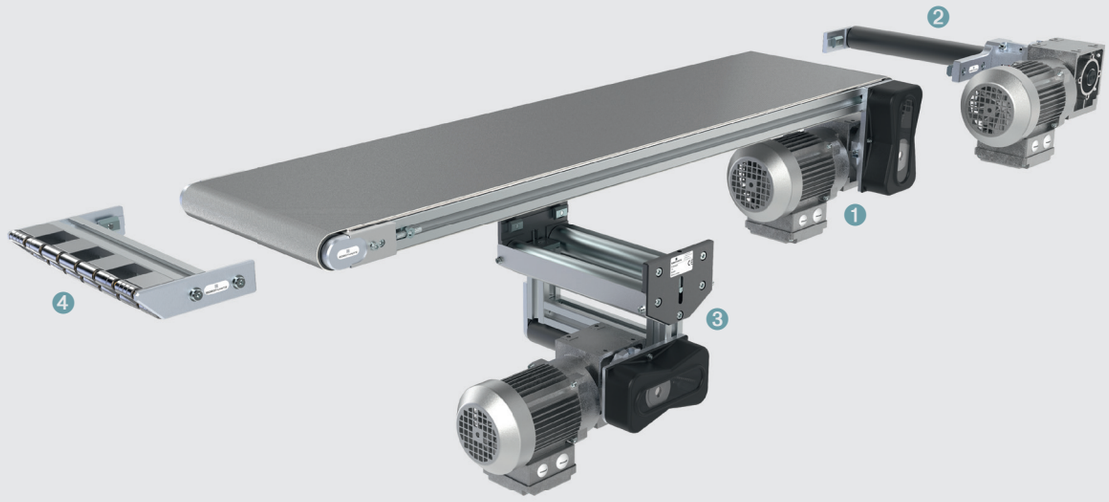

1. Front end timing belt drive (page 16)
2. Front end direct drive (page 17)
3. Center drive with timing belt (page 17)
4. Nose bar (page 16/17)

C5N Belt Conveyor Drive Options

1. Front end timing belt drive (page 18)
2. Front end direct drive (page 19)
3. Center drive with timing belt (page 19)
4. Nose bar (page 18/19)

C8N Belt Conveyor Drive Options

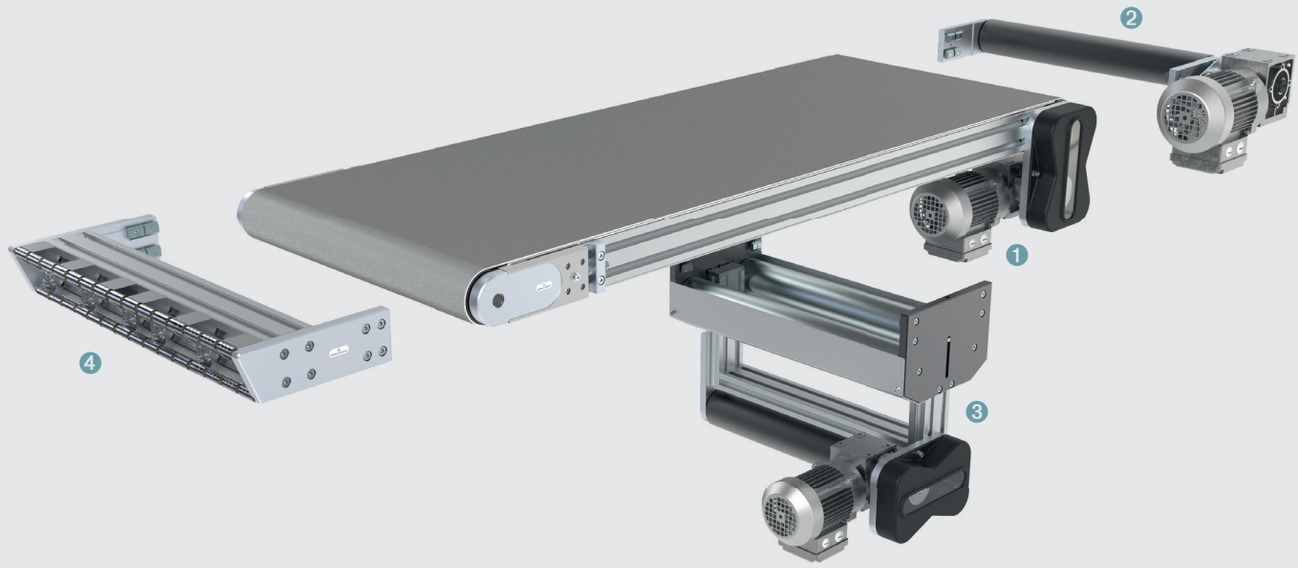

1. Front end timing belt drive (page 20)
2. Front end direct drive (page 21)
3. Center drive with timing belt (page 21)
4. Nose bar (page 20/21)

C4N Belt Conveyor 40

Application
Used for a wide variety of conveying applications

Technical Data
Belt speeds from 3 m/min up to 55 m/min

Drive power depending on belt speed and load ranging from
0.12 kW to 0.37 kW
(208-230/460V; 50/60Hz; IP54)
Max. total load of material 240 kg

Belt Type
low friction, high friction, accumulation, food grade, cut & oil resistant, cleated for incline transport, integrated belt side guides, etc.

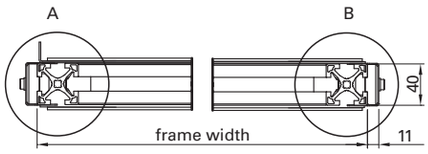

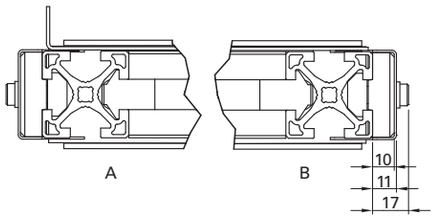

Side Guides for Belt Conveyors
see page 48

C4N without side guides
Belt width = frame width - 10 mm

C4N with side guides
Frame width ≦ 120 mm
Belt width = frame width - 15 mm
Frame width > 120 mm
Belt width = frame width - 20 mm

Drive Option[1]

Front End Timing Belt Drive

- A — Front end timing belt drive, left
- B — Front end timing belt drive, right
- C — Front end timing belt drive, left, tail end nose bar
- D — Front end timing belt drive, right, tail end nose bar

Front End Direct Drive

- E — Front end direct drive left
- F — Front end direct drive, right
- G — Front end direct drive, left, with tail end nose bar
- H — Front end direct drive, right, with tail end nose bar

Center Drive With Timing Belt

- K — Center drive with timing belt
- L — Center drive with timing belt and front end nose bar
- N — Center drive with timing belt and tail end nose bar
- Q — Center drive with timing belt and nose bar on both ends

Front End Timing Belt Drive

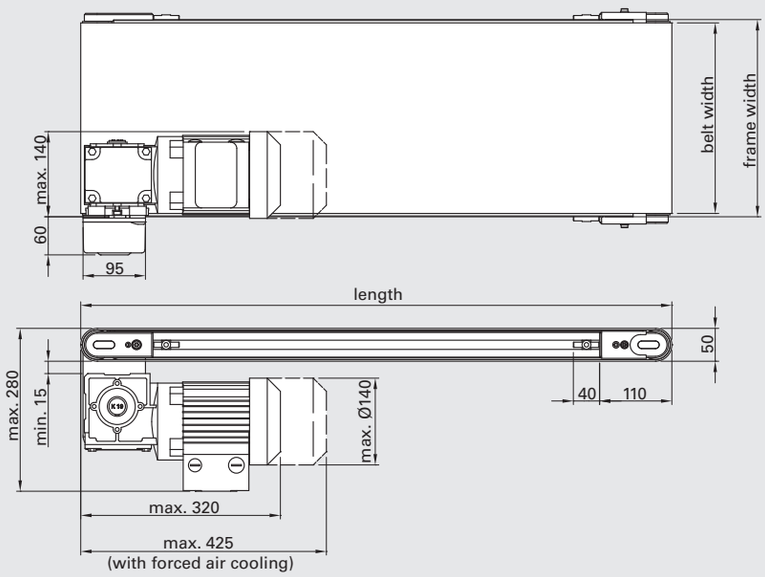

Optional: nose bar

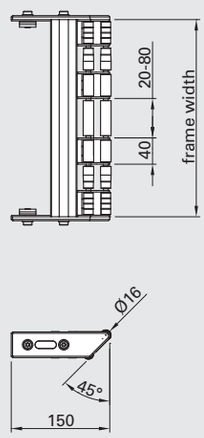

1) Standard direction is pulling. The running direction of all drives can be changed by reversing the polarity of the motor.
Drawing dimensions in mm

Front End Direct Drive

Optional: nose bar

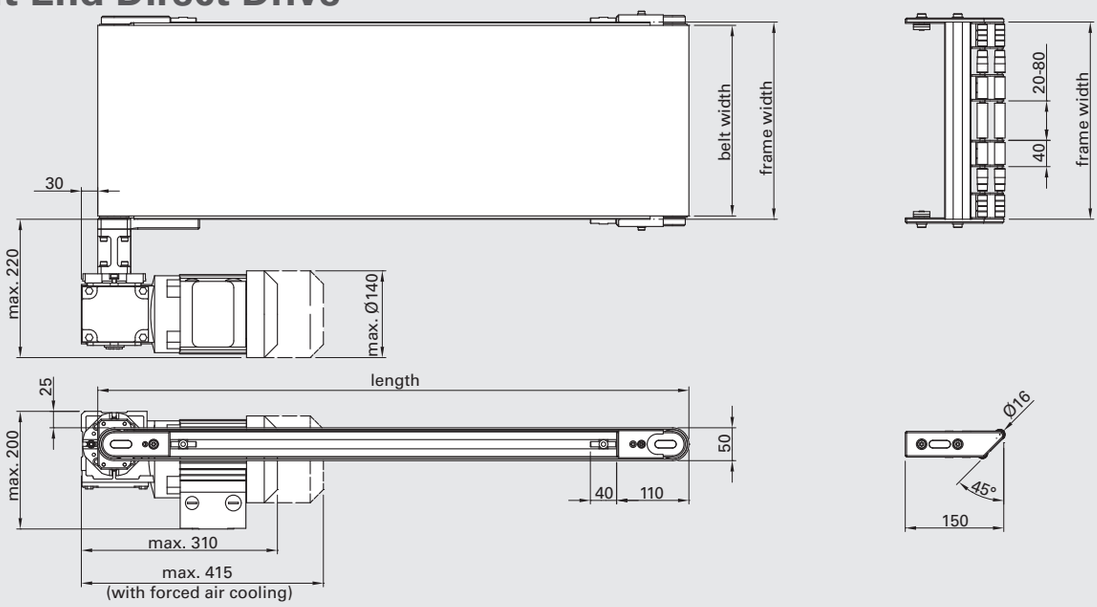

Center Drive With Timing Belt

Optional: nose bar

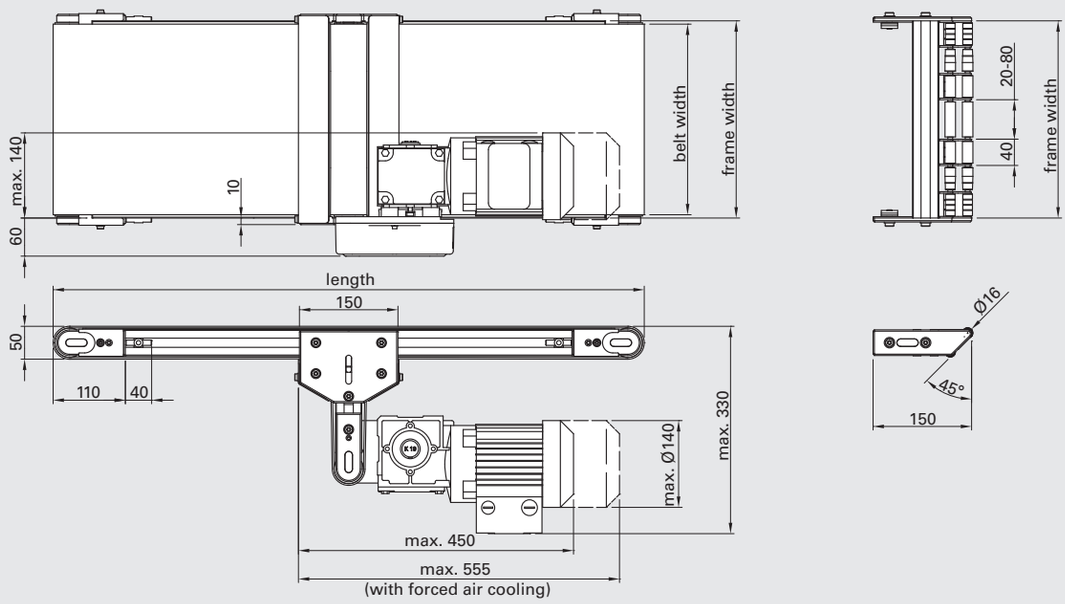

Standard Widths And Lengths[2]

Description	Frame Width	Max. length
Belt Conveyor 40	40 mm	12000 mm
Belt Conveyor 40	80 mm	12000 mm
Belt Conveyor 40	120 mm	12000 mm
Belt Conveyor 40	160 mm	12000 mm

Description	Frame Width	Max. length
Belt Conveyor 40	200 mm	12000 mm
Belt Conveyor 40	240 mm	12000 mm
Belt Conveyor 40	300 mm	12000 mm
Belt Conveyor 40	400 mm	12000 mm

Please note the minimum length to width ratio of 1.5:1.

Request For Quote / Order

Please use our Belt Conveyor configuration tool or our request form at www.robotunits.com

2) Special widths and special lengths are available upon request.
Drawing dimensions in mm

C5N Belt Conveyor 50

Application
Used for a wide variety of conveying applications

Technical Data
Belt speeds from 3 m/min up to 67 m/min

Drive power depending on belt speed and load ranging from
0.12 kW to 0.37 kW
(208-230/460V; 50/60Hz; IP54)
Max. total load of material 340 kg

Belt Type
low friction, high friction, accumulation, food grade, cut & oil resistant, cleated for incline transport, integrated belt side guides, etc.

Belt width = frame width - 20 mm

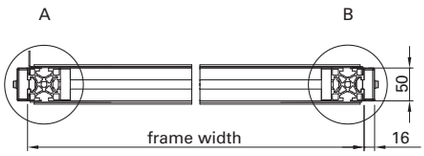

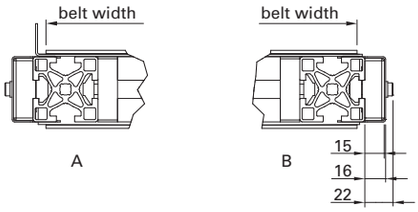

Side Guides for Belt Conveyors
see page 48

Drive Option[1]

Front End Timing Belt Drive

- A — Front end timing belt drive, left
- B — Front end timing belt drive, right
- C — Front end timing belt drive, left, tail end nose bar
- D — Front end timing belt drive, right, tail end nose bar

Front End Direct Drive

- E — Front end direct drive left
- F — Front end direct drive, right
- G — Front end direct drive, left, with tail end nose bar
- H — Front end direct drive, right, with tail end nose bar

Center Drive With Timing Belt

- K — Center drive with timing belt
- L — Center drive with timing belt and front end nose bar
- N — Center drive with timing belt and tail end nose bar
- Q — Center drive with timing belt and nose bar on both ends

Front End Timing Belt Drive

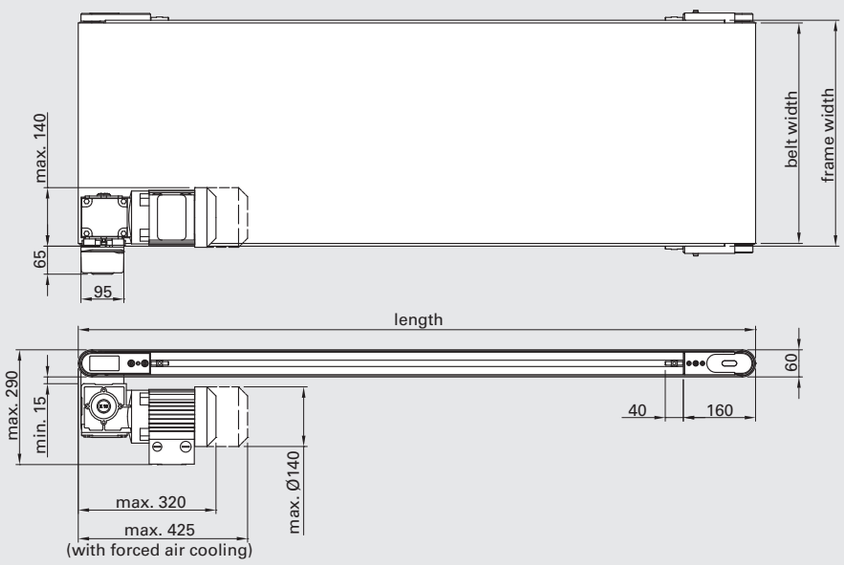

Optional: nose bar

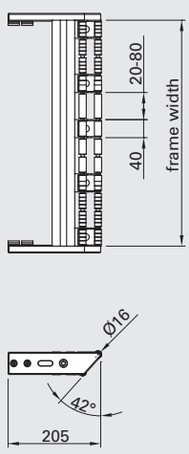

1) Standard direction is pulling. The running direction of all drives can be changed by reversing the polarity of the motor.
Drawing dimensions in mm

Front End Direct Drive

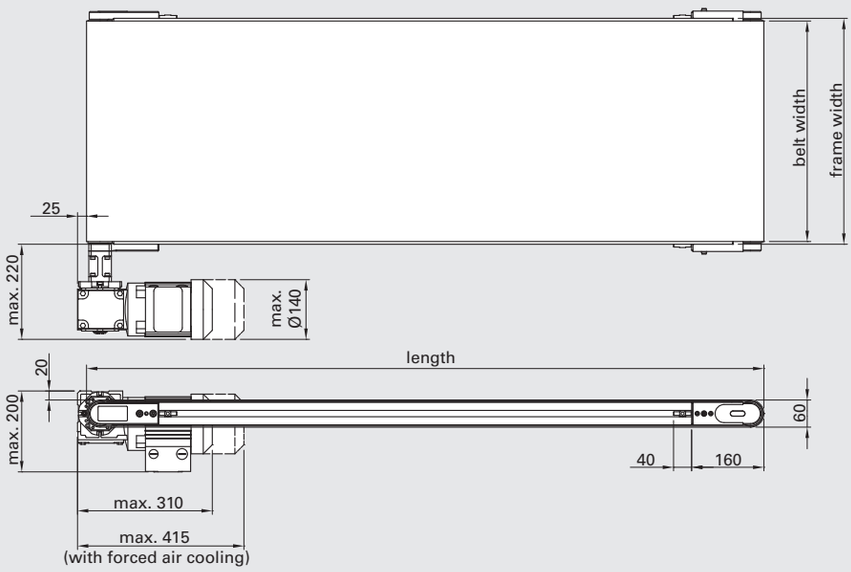

Optional: nose bar

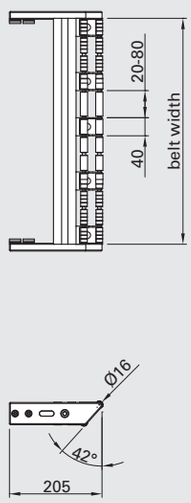

Center Drive With Timing Belt

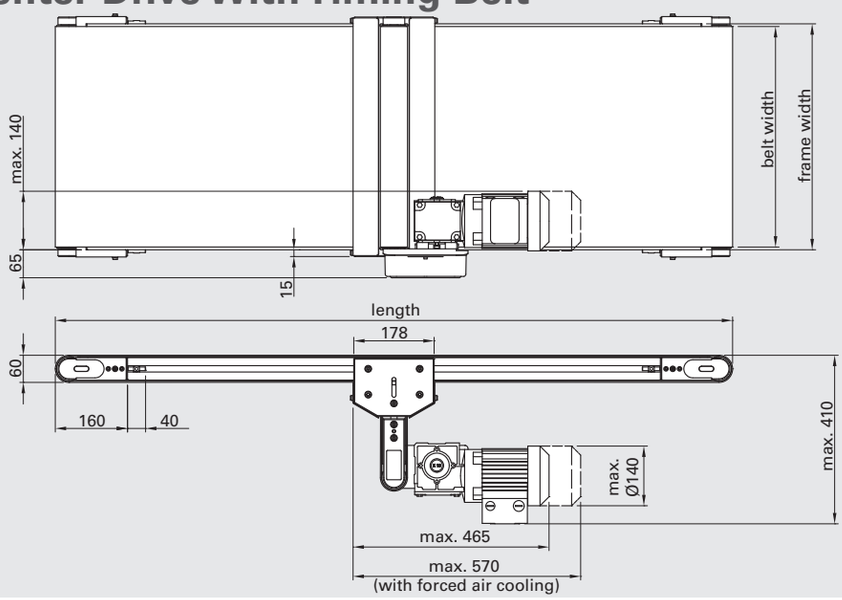

Optional: nose bar

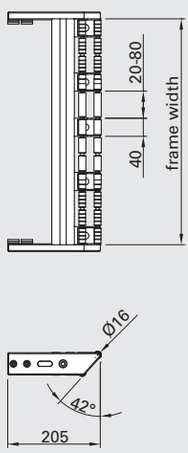

Standard Widths And Lengths[2]

Description	Frame Width	Max. length
Belt Conveyor 50	400 mm	12000 mm
Belt Conveyor 50	500 mm	12000 mm
Belt Conveyor 50	600 mm	12000 mm

Design Options

Side view

Please note the minimum length to width ratio of 1.5:1.

Request For Quote / Order

Please use our Belt Conveyor configuration tool or our request form at www.robotunits.com

2) Special widths and special lengths are available upon request.
Drawing dimensions in mm

C8N Belt Conveyor 80

Application
Used for a wide variety of conveying applications

Technical Data
Belt speeds from 5 m/min up to 65 m/min

Drive power depending on belt speed and load ranging from
0.25 kW to 0.55 kW
(208-230/460V; 50/60Hz; IP54)
Max. total load of material 800 kg

Belt Type
low friction, high friction, accumulation, food grade, cut & oil resistant, cleated for incline transport, integrated belt side guides, etc.

Side Guides for Belt Conveyors
see page 48

Belt width = frame width - 20 mm

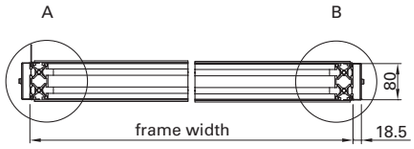

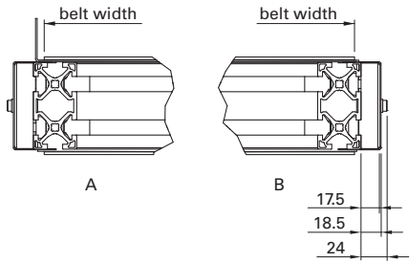

Drive Option[1]

Front End Timing Belt Drive

- A Front end timing belt drive, left
- B Front end timing belt drive, right
- C Front end timing belt drive, left, tail end nose bar
- D Front end timing belt drive, right, tail end nose bar

Front End Direct Drive

- E Front end direct drive, left
- F Front end direct drive, right
- G Front end direct drive, left, tail end nose bar
- H Front end direct drive, right, tail end nose bar

Center Drive With Timing Belt

- K Center drive with timing belt
- L Center drive with timing belt and front end nose bar
- N Center drive with timing belt and tail end nose bar
- Q Center drive with timing belt and nose bar on both ends

Front End Timing Belt Drive

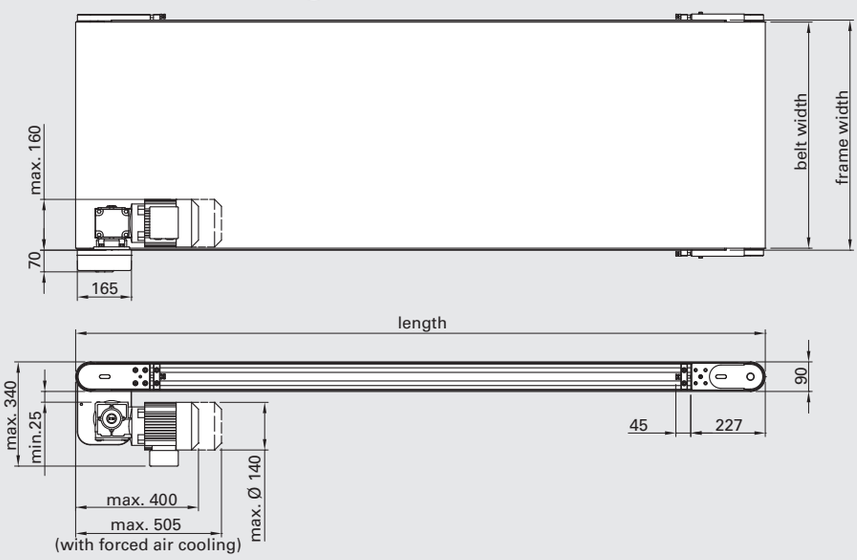

Optional: nose bar

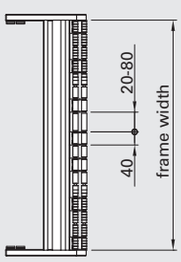

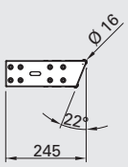

1) Standard direction is pulling. The running direction of all drives can be changed by reversing the polarity of the motor.
Drawing dimensions in mm

Front End Direct Drive

Optional: nose bar

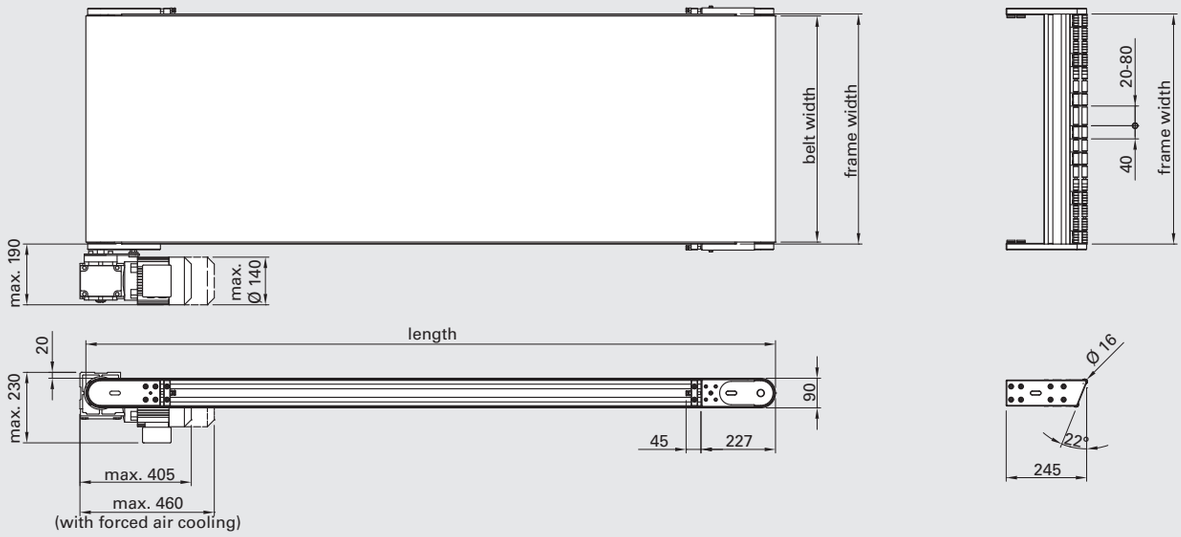

Center Drive With Timing Belt

Optional: nose bar

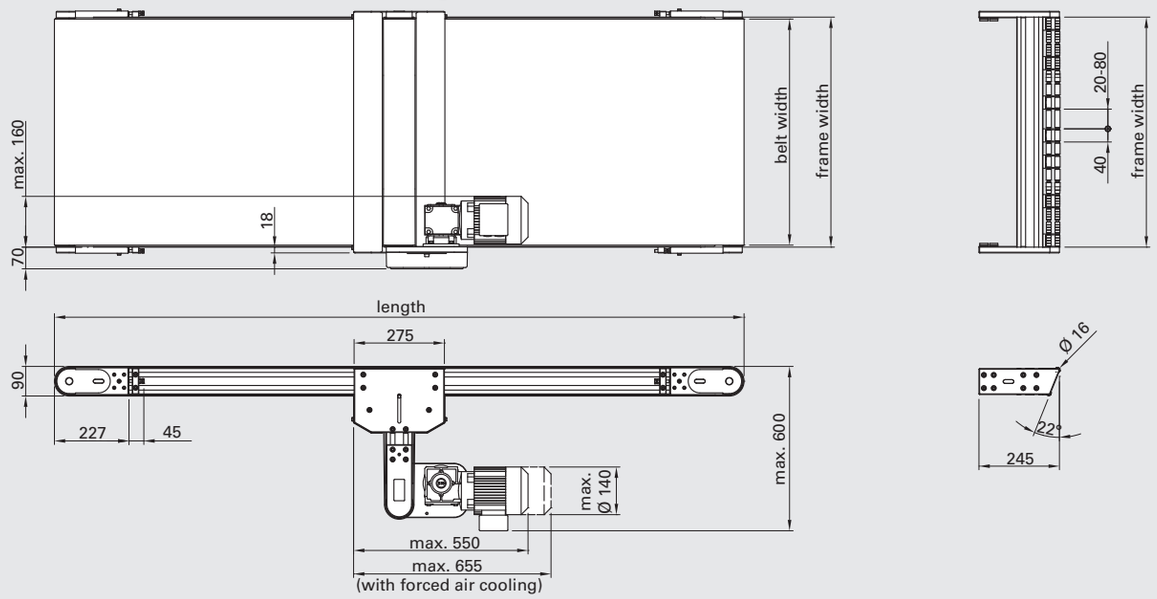

Standard Widths And Lengths[2]

Description	Frame Width	Max. length
Belt Conveyor 80	600 mm	12000 mm
Belt Conveyor 80	700 mm	12000 mm
Belt Conveyor 80	800 mm	12000 mm
Belt Conveyor 80	1000 mm	12000 mm
Belt Conveyor 80	1200 mm	12000 mm

Design Options

Side view

Please note the minimum length to width ratio of 1.5:1.

Request For Quote / Order

Please use our Belt Conveyor configuration tool or our request form at www.robotunits.com

2) Special widths and special lengths are available upon request.
Drawing dimensions in mm

C4F Conveyor Stand 40/50

Application
Stand for C4N and C5N

Technical Data
Material: clear anodized aluminum; galvanized GD-Zn; galvanized steel; rubber

Scope of Delivery
Stand segment fully assembled and attached to belt conveyor if applicable

Wide conveyor stand offers additional stability when conveyor heights exceed 3 times the frame width.

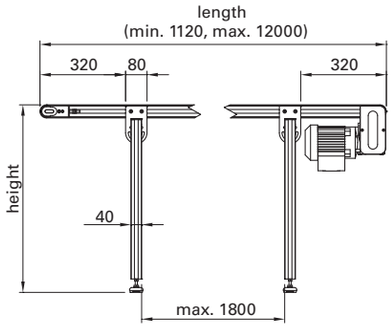

Standard Conveyor Stands

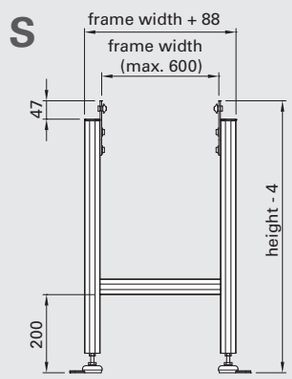

Leveling bases BAS 5108
Height adjustment ± 15 mm

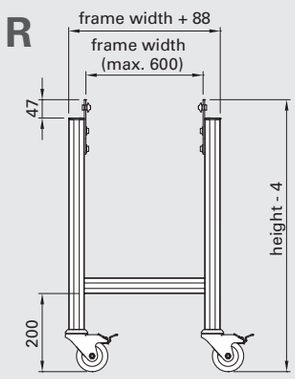

Swivel castors with brake
CAS 3080

Wide Conveyor Stands

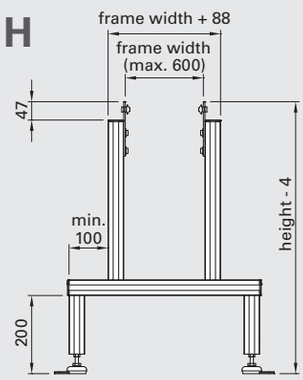

Leveling bases BAS 5108
Height adjustment ± 15 mm

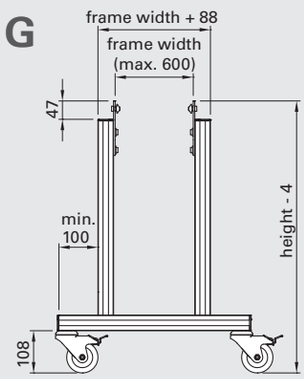

Swivel castors with brake
CAS 3080

Order Code

Description	Order Code[1]				
		Frame Width	Type	Length	Height
Conveyor Stand 40/50	C4F	_ _ _ _	_ NN	_ _ _ _	_ _ _ _

1) Please complete the order code by adding the corresponding parameters for order processing.
Drawing dimensions in mm

C8F Conveyor Stand 80

Application
Stand for C8N and C8M

Technical Data
Material: clear anodized aluminum; galvanized GD-Zn; galvanized steel; rubber

Scope of Delivery
Stand segment fully assembled and attached to belt conveyor if applicable

Wide conveyor stand offers additional stability when conveyor heights exceed 3 times the frame width.

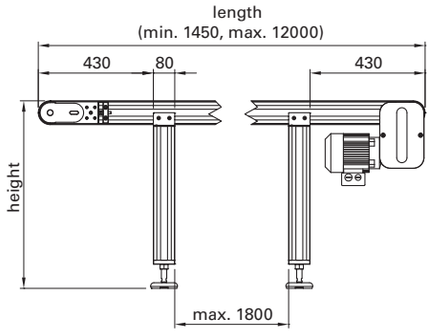

Standard Conveyor Stands

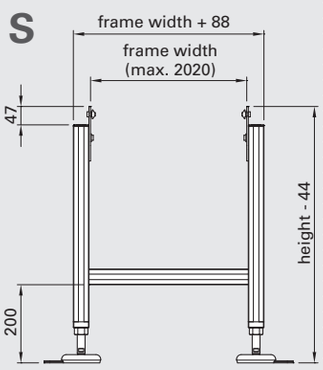

Leveling bases BAS 1120
Height adjustment ± 30 mm

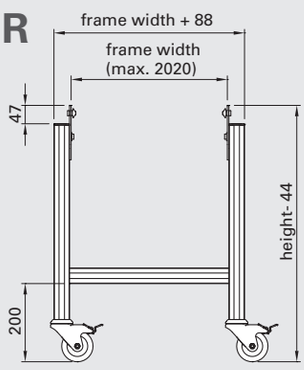

Swivel castors with brake
CAS 3080

Wide Conveyor Stands

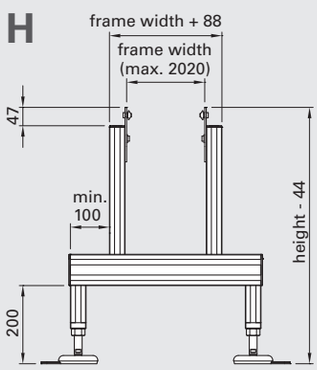

Leveling bases BAS 1120
Height adjustment ± 30 mm

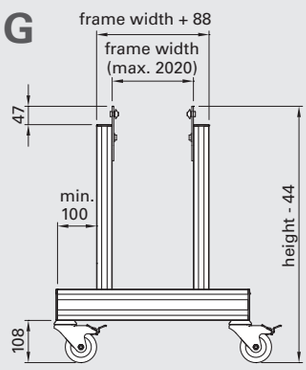

Swivel castors with brake
CAS 3080

Order Code

Description	Order Code[1]				
		Frame Width	Type	Length	Height
Conveyor Stand 80	C8F	_ _ _ _	_ NN	_ _ _ _	_ _ _ _

1) Please complete the order code by adding the corresponding parameters for order processing.
Drawing dimensions in mm

C8M Straight Modular Belt Conveyor Drive Options

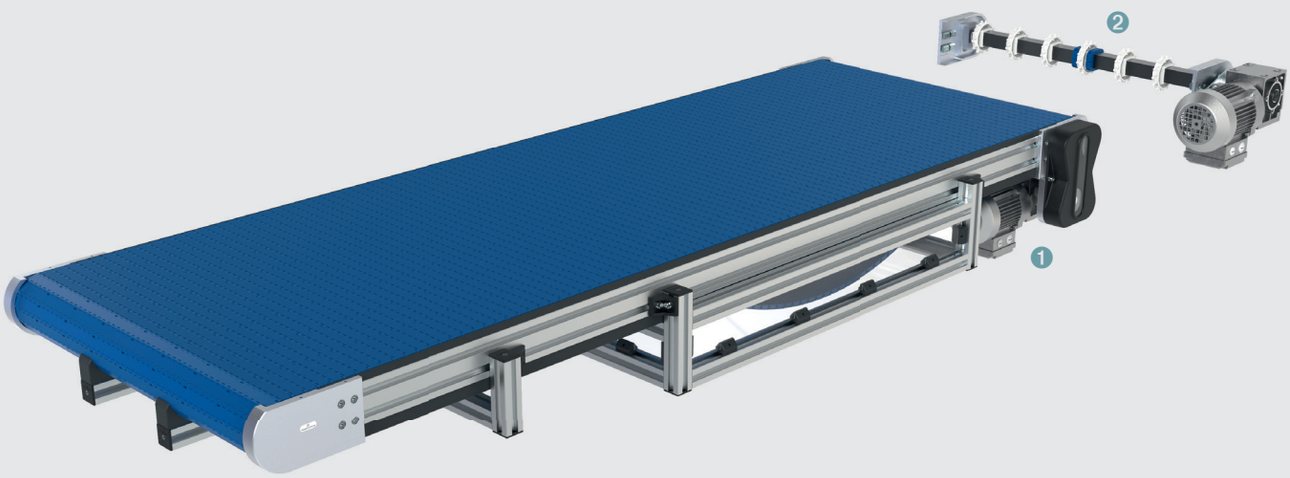

1 Front end timing belt drive, right (page 26)
2 Front end direct drive, right (page 27)

C8M Curved Modular Belt Conveyor Drive Options

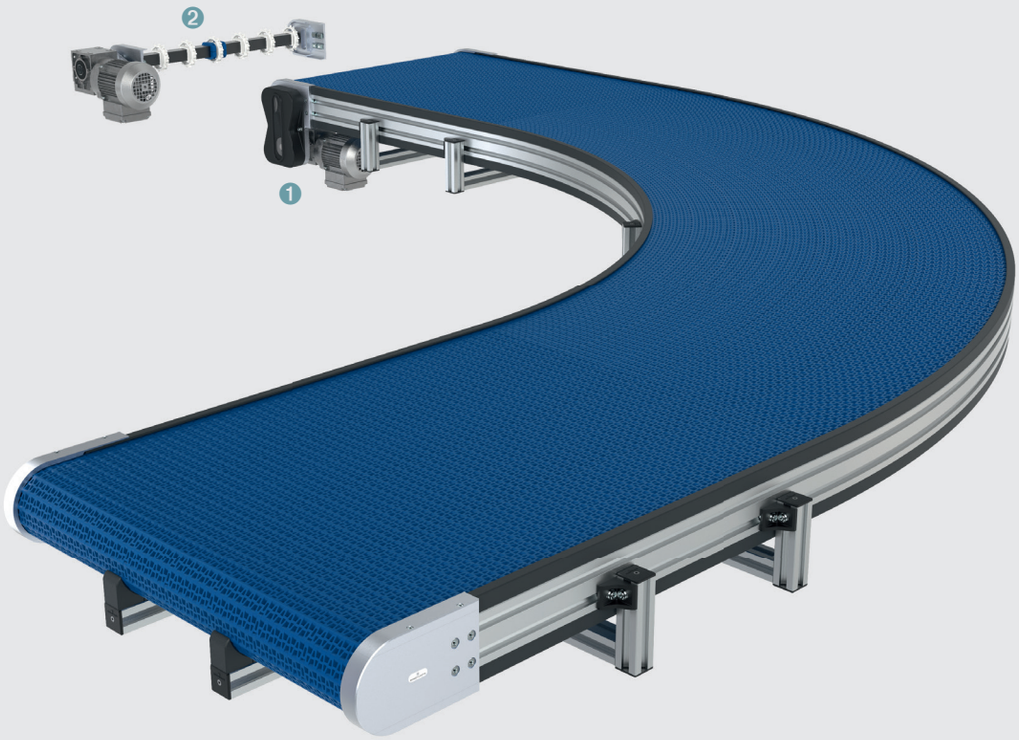

1 Front end timing belt drive, left (page 28)
2 Front end direct drive, left (page 29)

C8M Straight Modular Belt Conveyors

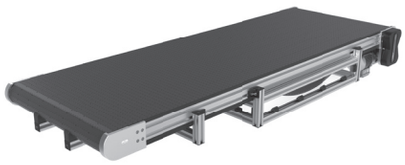

Application
Used for a wide variety of conveying applications

Technical Data
Belt speeds from
6 m/min up to 50 m/min

Drive power depending on belt speed and load ranging from
0.25 kW to 0.55 kW
(208-230/460V; 50/60Hz; IP54)
Max. total load of material 750 kg
Modular belt pitch 1 inch

Modular belt design
Modular belt open
Modular belt closed

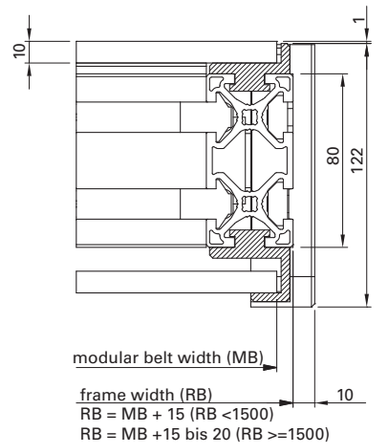

Side Guides for Modular Belt Conveyors
see page 48

Drive Option[1]

Front End Timing Belt Drive

- A Front end timing belt drive left
- B Front end timing belt drive, right

Front End Direct Drive

- E Front end direct drive left
- F Front end direct drive, right

Front End Timing Belt Drive

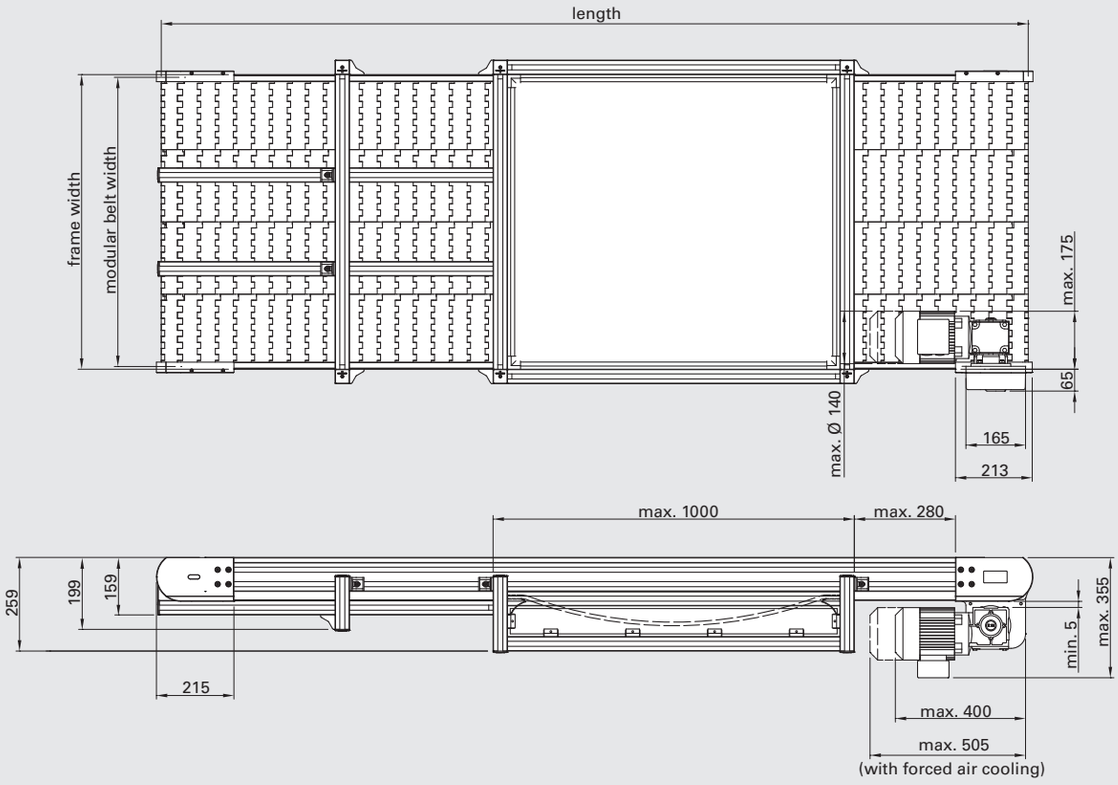

Front End Direct Drive

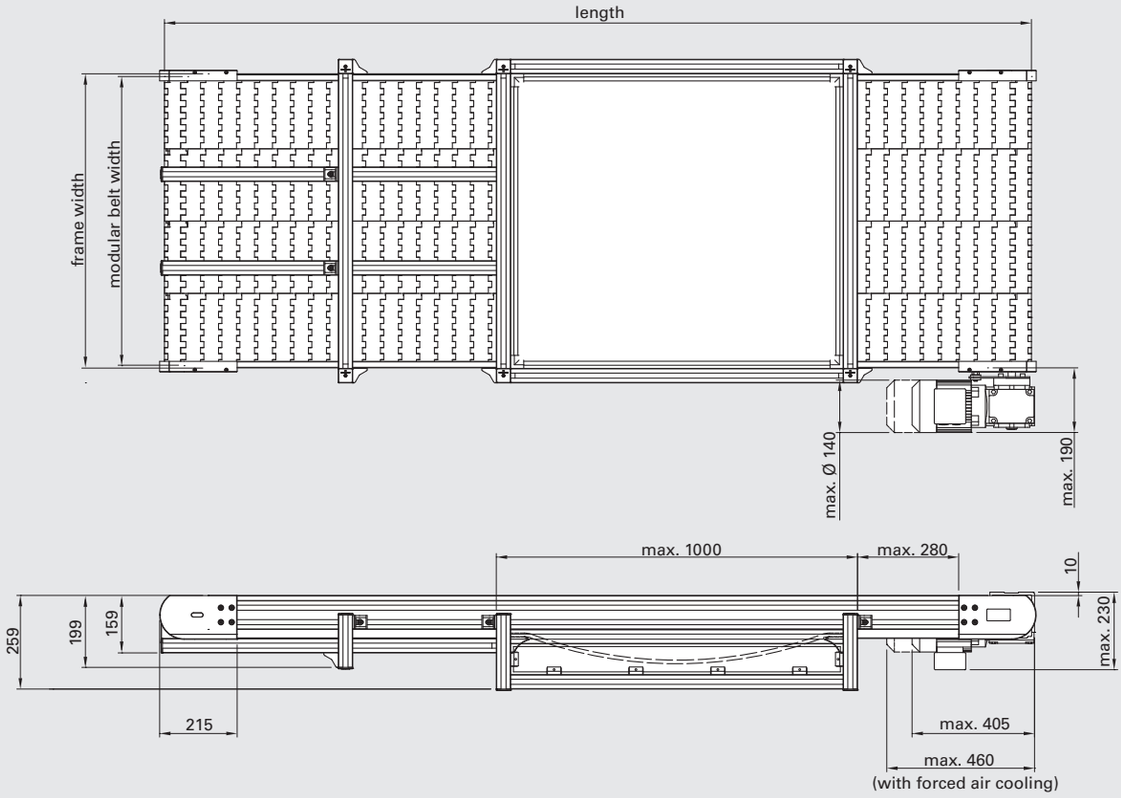

Design Options[2]

Side view

Length And Frame Width

Description	Min. length[3]	Max. length[3]	Min. modular belt width[4]	Max. modular belt width[4]
C8M Straight front end timing belt drive	1500 mm	12000 mm	150 mm	2000 mm
C8M Straight front end direct drive	1500 mm	12000 mm	150 mm	2000 mm

Request For Quote / Order

Please use our request form at www.robotunits.com.

1) Only pulling direction is possible
2) Design options on request
3) Special lengths are available upon request
4) Modular belt widths can be ordered ranging from min. 150 mm to max. 2000 mm in steps of 50 mm.

Drawing dimensions in mm

C8M Curved Modular Belt Conveyors

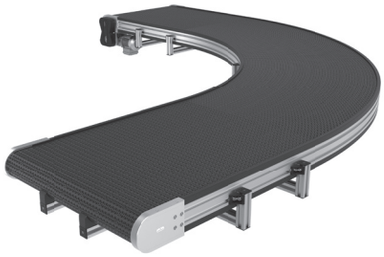

Application
Used for a wide variety of conveying applications

Technical Data
Belt speeds from
6 m/min up to 30 m/min

Drive power depending on belt speed and load ranging from
0.25 kW to 0.55 kW
(208-230/460V; 50/60Hz; IP54)
Maximum load to be conveyed: on request
Modular belt pitch 1 inch

Modular belt design
Modular belt open

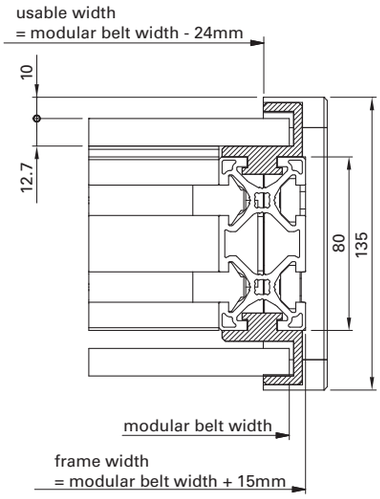

Side Guides for Modular Belt Conveyors
see page 48

Drive Option[1]

Front End Timing Belt Drive

A Front end timing belt drive left

B Front end timing belt drive, right

Front End Direct Drive

E Front end direct drive left

F Front end direct drive, right

Front End Timing Belt Drive

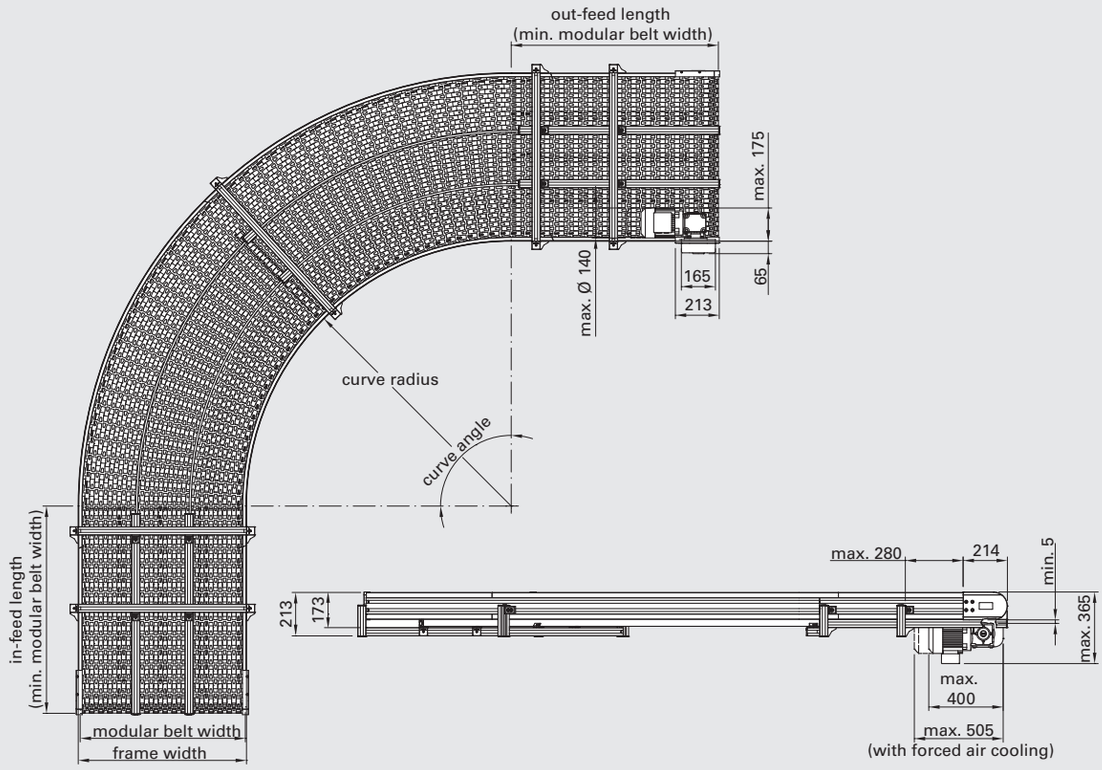

Front End Direct Drive

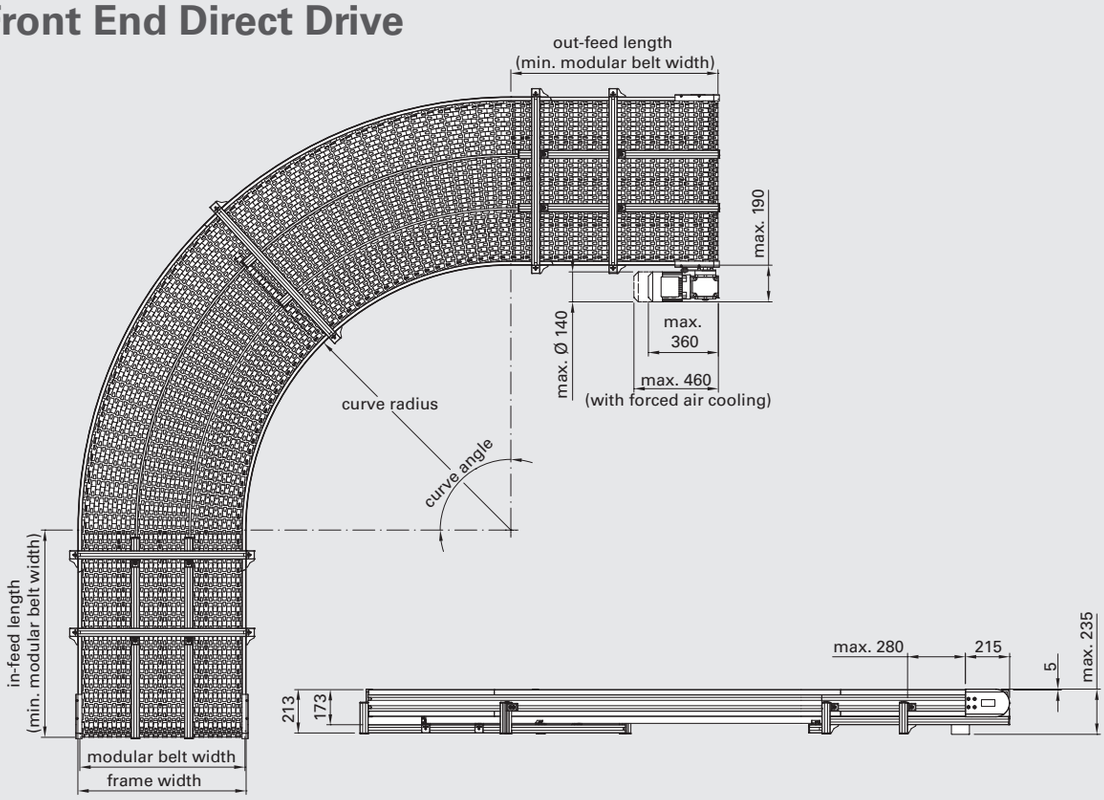

Design Options[2]

Side view

Top view

Frame Width

Description	Frame width min.[3]	Frame width max.[3]
C8M Curved front end timing belt drive	215 mm	1215 mm
C8M Curved front end direct drive	215 mm	1215 mm

Request For Quote / Order

Please use our request form at www.robotunits.com.

1) Only pulling direction is possible
2) Design options on request
3) Frame widths can be ordered ranging from min. 215 mm to max. 1215 mm in steps of 50 mm.

Drawing dimensions in mm

C4T Timing Belt Conveyor Drive And Connection Options

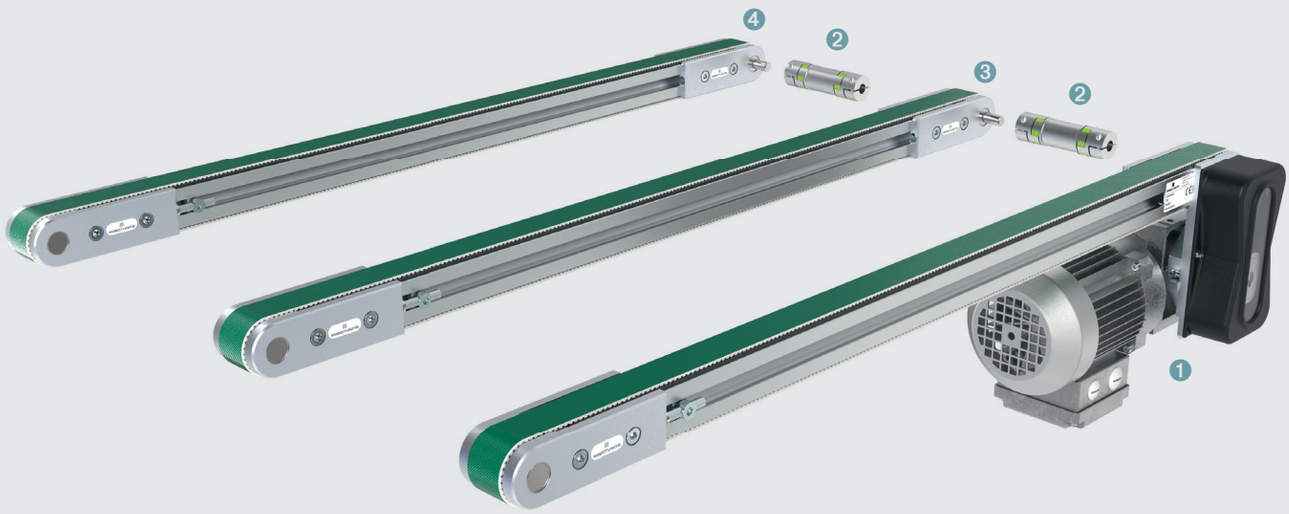

1. Front end timing belt drive, right, with output shaft (page 32)
2. Connection shaft with coupling COL 5220 (page 173)
3. Timing belt lane without motor, output shaft, right (page 32)
4. Timing belt lane without motor, with output shaft, right (page 32)

C8T Timing Belt Conveyor Drive And Connection Options

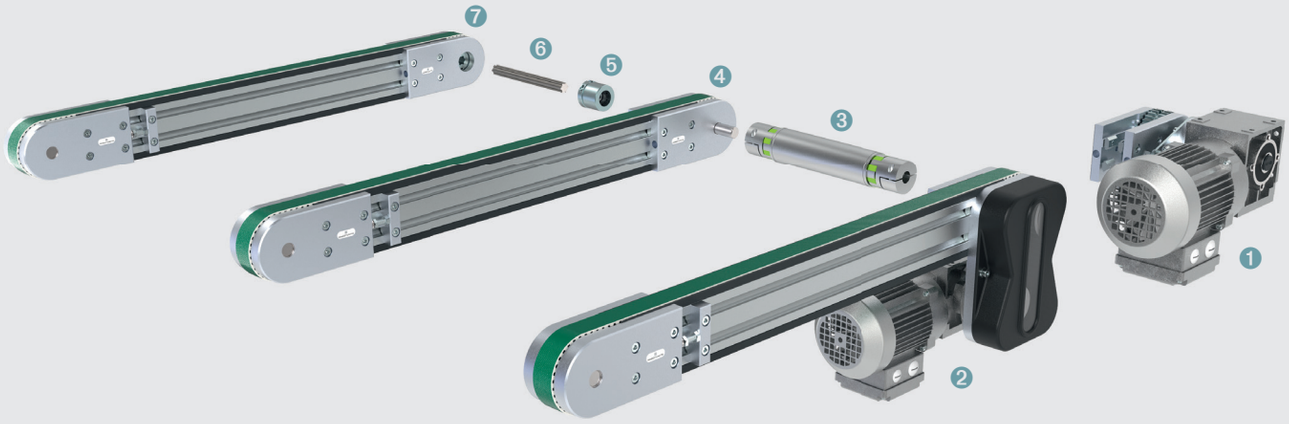

1. Front end direct drive, right, with output shaft (page 34)
2. Front end timing belt drive, right, with output shaft (page 34)
3. Connection shaft with coupling COL 5240 (page 173)
4. Timing belt lane without motor, with output shaft on both sides (page 34)
5. Connection Hub COP 4501 (page 140)
6. Splined Shaft COL 8500 (page 141)
7. Timing belt lane without motor, with splined shaft hub (page 34)

C4T Timing Belt Conveyor 40

Side Guides for Timing Belt Conveyors
see page 48

Application
Used for a wide variety of conveying applications

Technical Data
Speeds from 3 m/min up to 58 m/min

Drive power depending on belt speed and load ranging from
0.12 kW to 0.37 kW
(208-230/460V; 50/60Hz; IP54)
Max. total load of material 160 kg

Pulley
Number of teeth per pulley = 30
Pitch circle diameter = 47.75 mm

Belt Type
Standard application, cleated for incline transport, accumulation, etc.

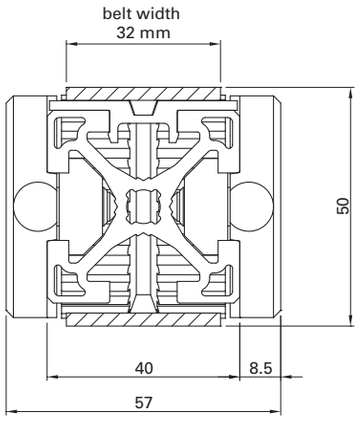

Drive Option[1]

Front End Timing Belt Drive

- A — Front end timing belt drive, left
- B — Front end timing belt drive, right
- O — Front end timing belt drive, left and output shaft
- P — Front end timing belt drive, right and output shaft

Timing Belt Lane Without Motor

- T — Timing belt lane with output shaft on both sides
- U — Timing belt lane with output shaft, left
- V — Timing belt lane with output shaft, right

Front End Timing Belt Drive, Double Lane

- A 2 — Front end timing belt drive, left, double lane
- B 2 — Front end timing belt drive, right, double lane

Front End Timing Belt Drive, Triple Lane

- A 3 — Front end timing belt drive, left, triple lane
- B 3 — Front end timing belt drive, right, triple lane

Front End Timing Belt Drive

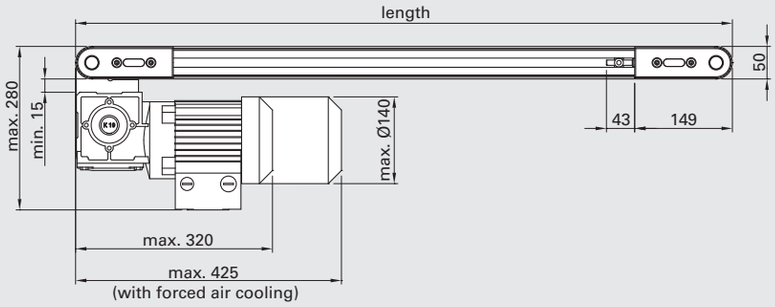

Front End Timing Belt Drive

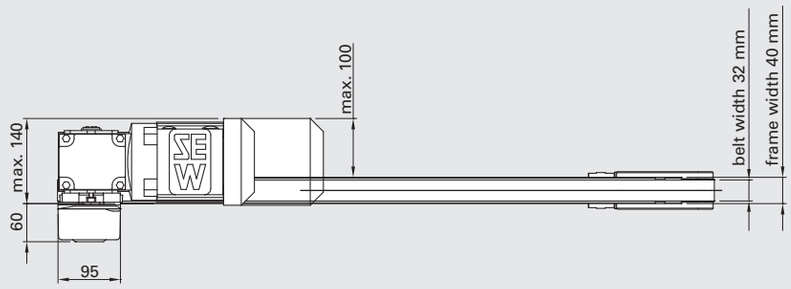

O/P

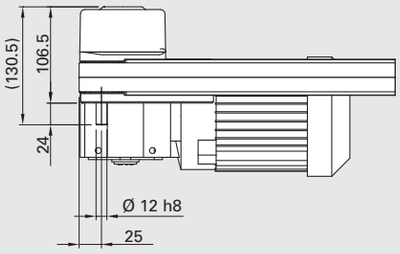

Front End Timing Belt Drive, Double Lane

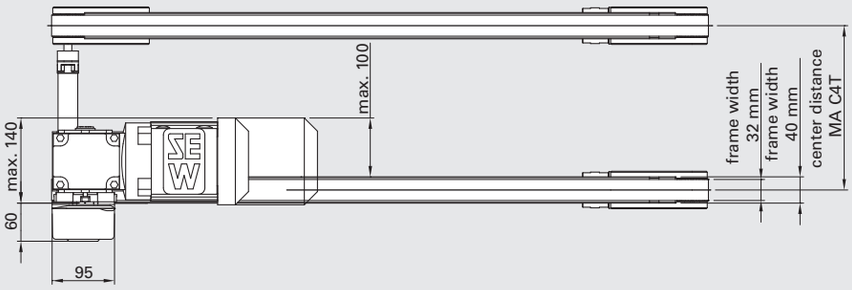

U/V

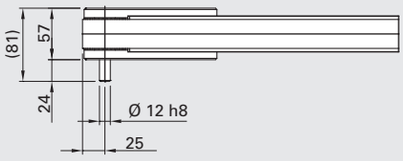

Front End Timing Belt Drive, Triple Lane

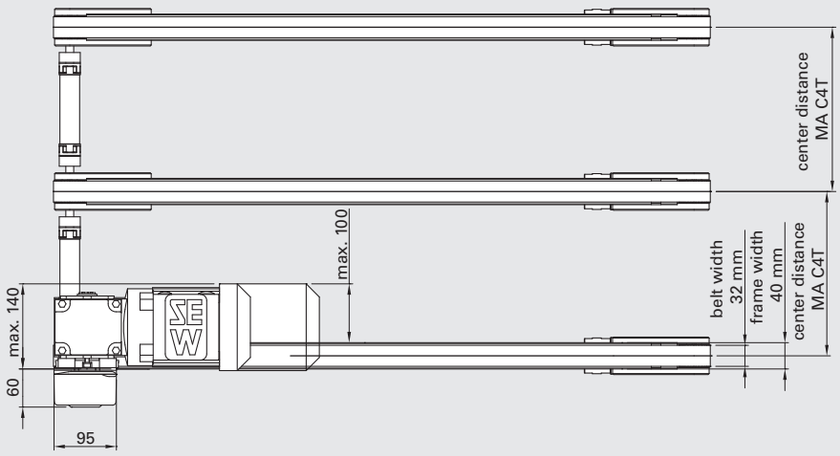

T

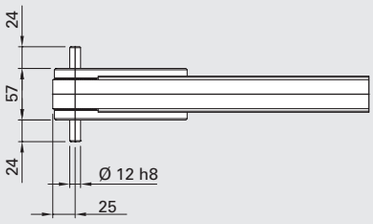

Length And Frame Width

Description	Min. length	Max. length	MA1	MA2
Timing Belt Conveyor 40 Front end timing belt drive	400 mm	12000 mm		
Timing Belt Conveyor 40 Front end timing belt drive, double lane	400 mm	12000 mm	_ _ _ _	
Timing Belt Conveyor 40 Front end timing belt drive, triple lane	400 mm	12000 mm	_ _ _ _	_ _ _ _
Timing Belt Conveyor 40 Timing belt lane without motor	400 mm	12000 mm		

Order Placement

Please use our Belt Conveyor configuration tool or our request form at www.robotunits.com

1) Standard direction is pulling. The running direction of all drives can be changed by reversing the polarity of the motor.
Drawing dimensions in mm

C8T Timing Belt Conveyor 80

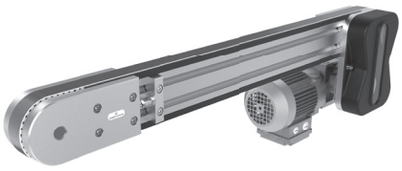

Application
Used for a wide variety of conveying applications

Technical Data
Speeds from 6 m/min up to 66 m/min

Drive power depending on belt speed and load ranging from
0.25 kW to 0.37 kW
(208-230/460V; 50/60Hz; IP54)
Max. total load of material 400 kg

Pulley
Number of teeth per pulley = 32
Pitch circle diameter = 101.85 mm

Belt Type
Standard application, cleated for incline transport, accumulation, etc.

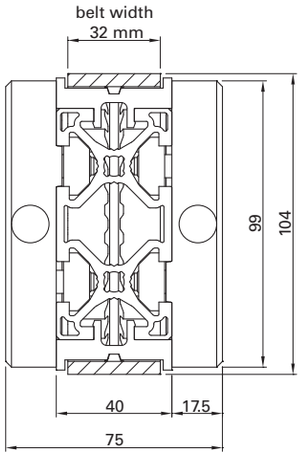

Side Guides for Timing Belt Conveyors
see page 48

Drive Option[1]

Front End Timing Belt Drive, Fmax 4000 N

- A — Front end timing belt drive, left
- B — Front end timing belt drive, right
- O — Front end timing belt drive, left and output shaft
- P — Front end timing belt drive, right and output shaft

Front End Direct Drive, Fmax 6000 N

- E — Front end direct drive left
- F — Front end direct drive, right
- R — Front end direct drive, left and output shaft
- S — Front end direct drive, right and output shaft

Front End Drive, Double Lane

- A 2 — Front end timing belt drive,left, double lane
- B 2 — Front end timing belt drive, right, double lane
- E 2 — Front end direct drive, left, double lane
- F 2 — Front end direct drive, right, double lane

Front End Drive, Triple Lane

- A 3 — Front end timing belt drive, left, triple lane
- B 3 — Front end timing belt drive, right, triple lane
- E 3 — Front end direct drive left, triple lane
- F 3 — Front end direct drive right, triple lane

Timing Belt Lane Without Motor

- T — Timing belt lane with output shaft on both sides
- U — Timing belt lane with output shaft, left
- V — Timing belt lane with output shaft, right

Timing Belt Lane Without Motor, Adjustable

- W — Timing belt lane with splined shaft hub

Front end timing belt drive

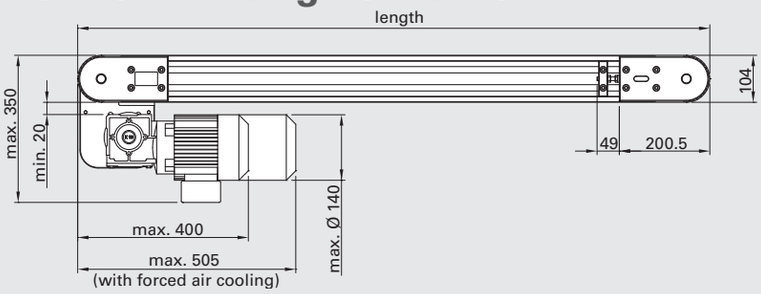

Front end direct drive

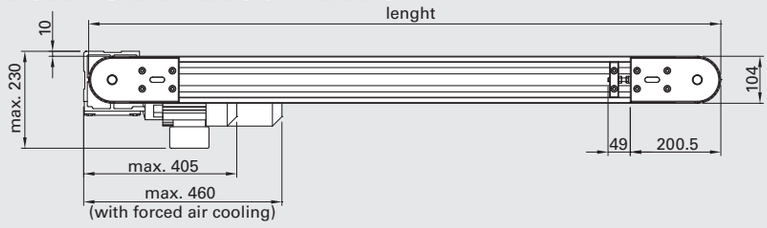

Front End Timing Belt Drive, Double-, Triple Lane

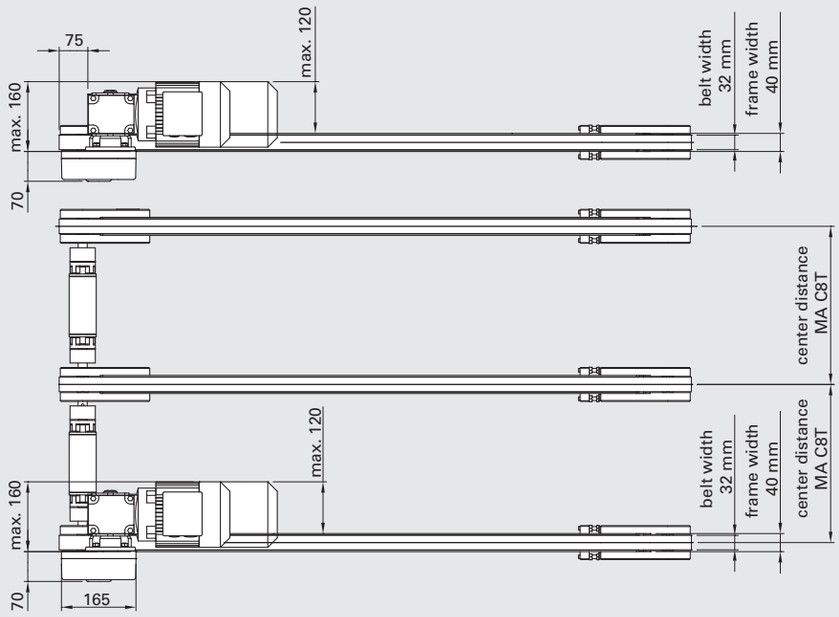

Front End Direct Drive, Double-, Triple Lane

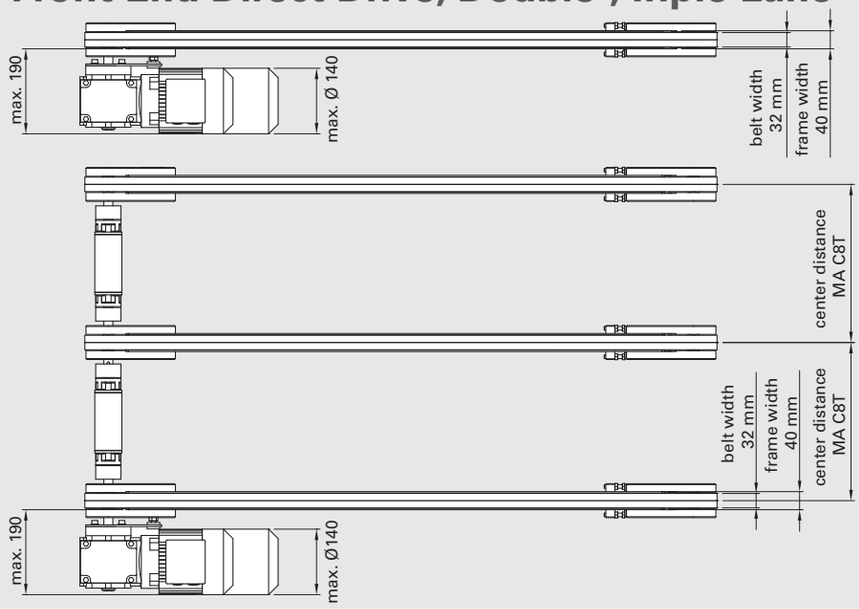

O/P

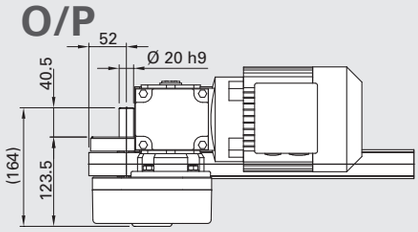

U/V

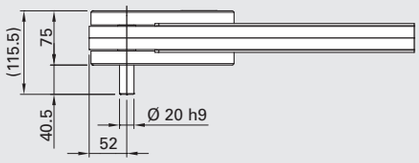

T

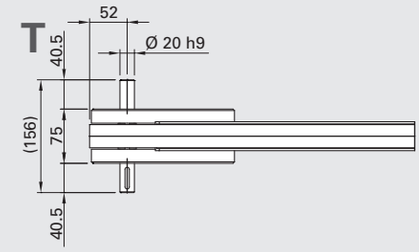

R/S

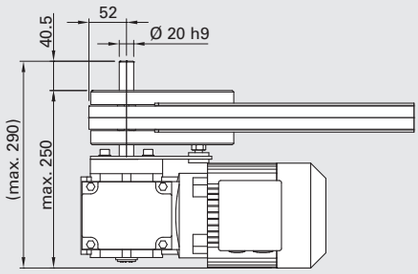

W, adjustable

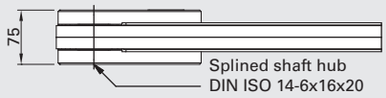

Length And Frame Width

Description	Min. length	Max. length	MA1	MA2
Timing Belt Conveyor 80 Front end timing belt drive	550 mm	12000 mm		
Timing Belt Conveyor 80 Front end timing belt drive, double lane	550 mm	12000 mm	_ _ _ _	
Timing Belt Conveyor 80 Front end timing belt drive, triple lane	550 mm	12000 mm	_ _ _ _	_ _ _ _
Timing Belt Conveyor 80 Front end direct drive	550 mm	12000 mm		
Timing Belt Conveyor 80 Front end direct drive, double lane	550 mm	12000 mm	_ _ _ _	
Timing Belt Conveyor 80 Front end direct drive, triple lane	550 mm	12000 mm	_ _ _ _	_ _ _ _
Timing Belt Conveyor 80 Timing belt lane without motor	550 mm	12000 mm		

Order Placement

Please use our Belt Conveyor configuration tool or our request form at www.robotunits.com

1) Standard direction is pulling. The running direction of all drives can be changed by reversing the polarity of the motor.

C4G Conveyor Stand 40

Application
Stand for C4T

Technical Data
Material: clear anodized aluminum; galvanized GD-Zn; galvanized steel; rubber

Scope of Delivery
Stand segment fully assembled and attached to belt conveyor if applicable

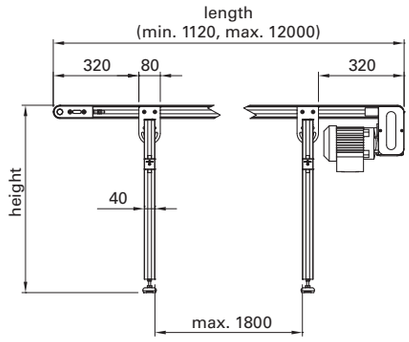

Stand Types: Single Lane

S

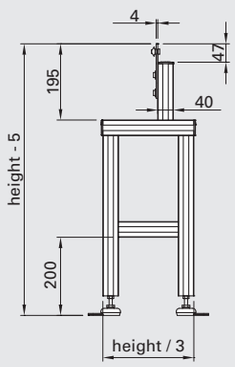

Leveling bases BAS 5108
Height adjustment ± 15 mm

R

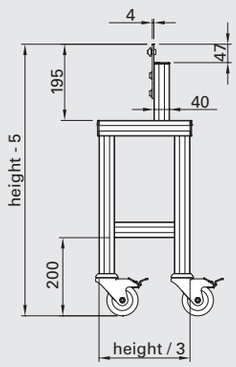

Swivel castors with brake
CAS 3080

Stand Types: Double Lanes

H

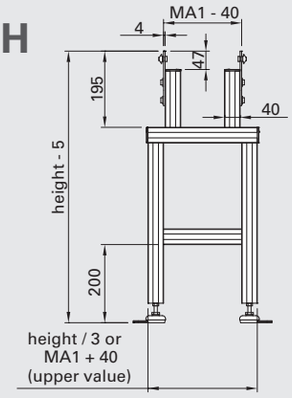

Leveling bases BAS 5108
Height adjustment ± 15 mm

G

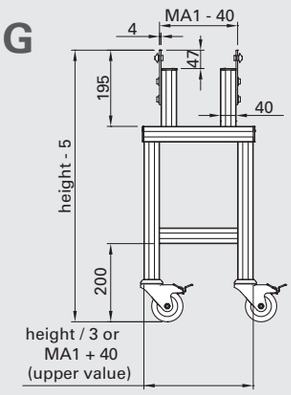

Swivel castors with brake
CAS 3080

Stand Types: Triple Lane

K

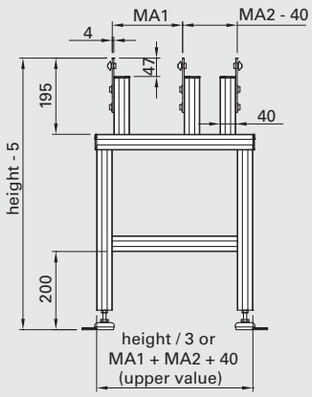

Leveling bases BAS 5108
Height adjustment ± 15 mm

M

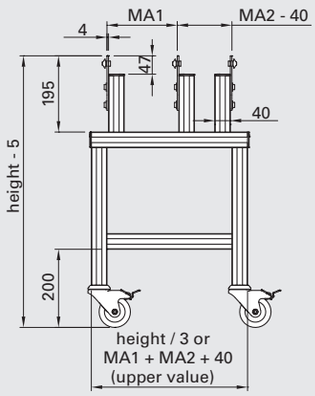

Swivel castors with brake
CAS 3080

Order Code

Description	Order Code[1]					
		Length	Type	Height	MA1	MA2
Conveyor Stand 40	C4G	_ _ _ _	_ NN	_ _ _ _	_ _ _ _	_ _ _ _

1) Please complete the order code by adding the corresponding parameters for order processing.
Drawing dimensions in mm

C8G Conveyor Stand 80

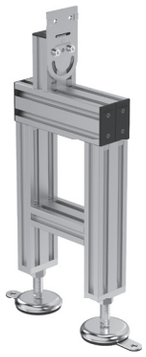

Application
Stand for C8T

Technical Data
Material: clear anodized aluminum; galvanized GD-Zn; galvanized steel; rubber

Scope of Delivery
Stand segment fully assembled and attached to belt conveyor if applicable

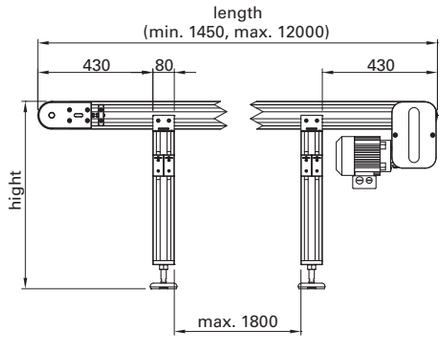

Stand Types: Single Lane

S

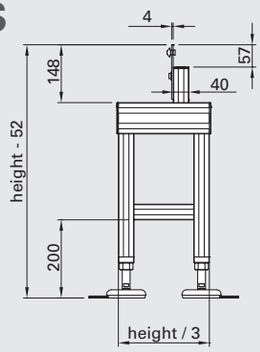

Leveling bases BAS 1120
Height adjustment ± 30 mm

R

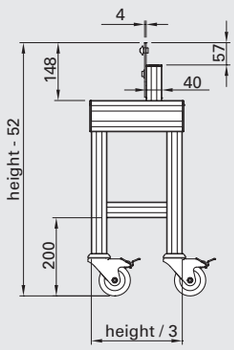

Swivel castors with brake
CAS 3080

Stand Types: Double Lanes

H

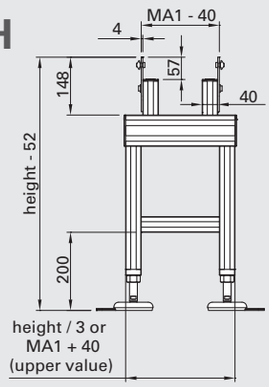

Leveling bases BAS 1120
Height adjustment ± 30 mm

G

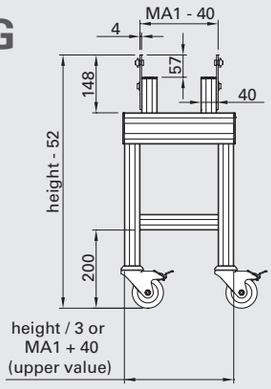

Swivel castors with brake
CAS 3080

Stand Types: Triple Lane

K

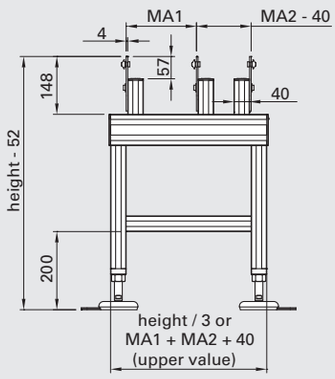

Leveling bases BAS 1120
Height adjustment ± 30 mm

M

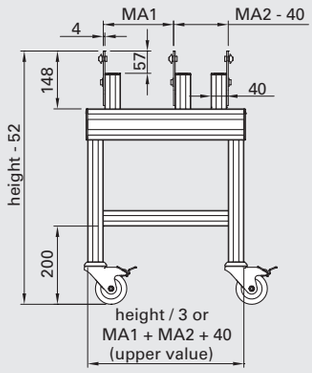

Swivel castors with brake
CAS 3080

Order Code

Description	Order Code[1]					
		Length	Type	Height	MA1	MA2
Conveyor Stand 80	C8G	_ _ _ _	_ NN	_ _ _ _	_ _ _ _	_ _ _ _

1) Please complete the order code by adding the corresponding parameters for order processing.
Drawing dimensions in mm

Powered Roller Conveyor Straight

Powered Roller Conveyor Curved

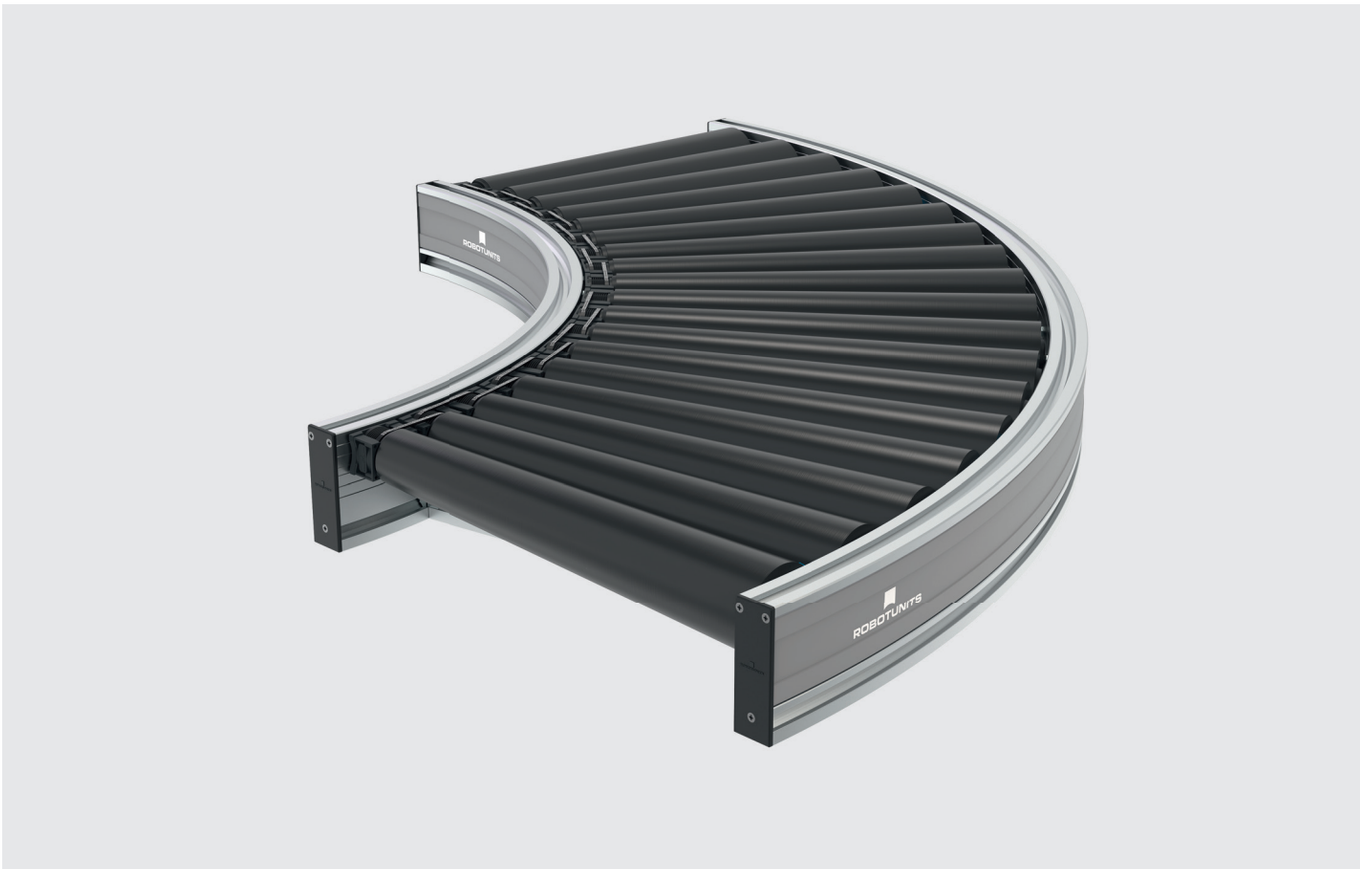

Transfer Unit 90°

Turntable

Powered Roller Conveyor Modules

Description	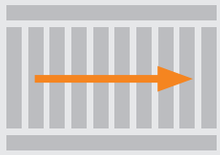		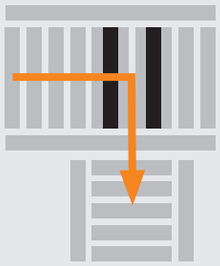	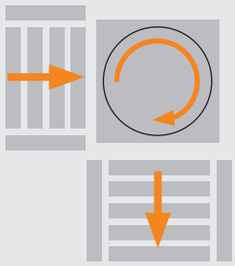
Transfer	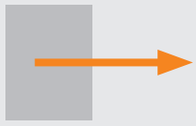	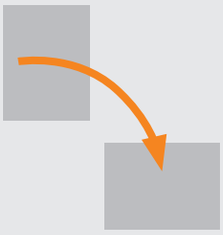	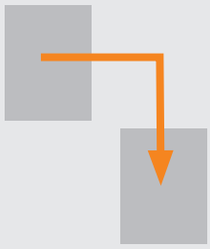	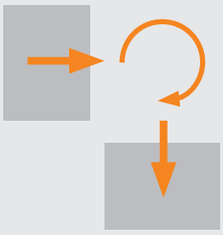
Space requirement		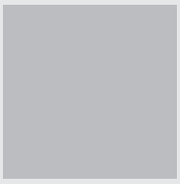		
Output (cycles/h)	~ 2000	~ 2000	~ 1500	~ 350
Available range	0°	45° / 90°	0° / ±90°	0° – 270°
Applications	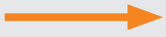		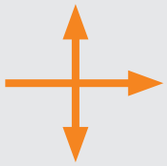	

Zero Pressure Accumulation

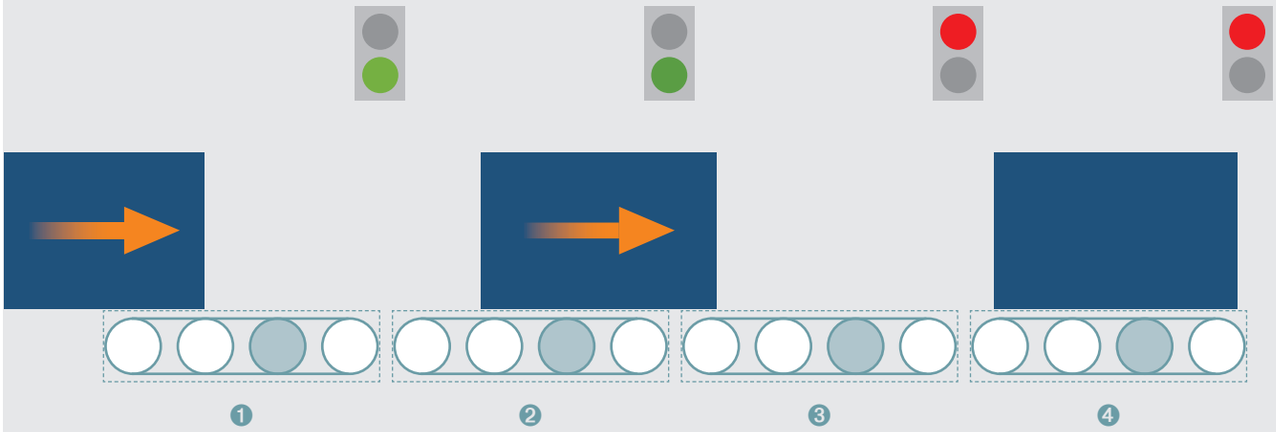

The roller conveyor with zero pressure accumulation logic (ZPA) is divided into individual zones.
The different zones are interconnected and communicate with each other.
If a transported product is running towards an occupied zone 4, the product remains in the previous free zone 3.
When the occupied zones become free 4, upstream zones follow automatically 3.

Advantages
+"Plug and Play“ solution with decentralized controller = no primary control required (e.g. PLC)
+ Only the required rollers turn = engery efficient
+ Zero pressure (no-contact) conveying

Drive Technology

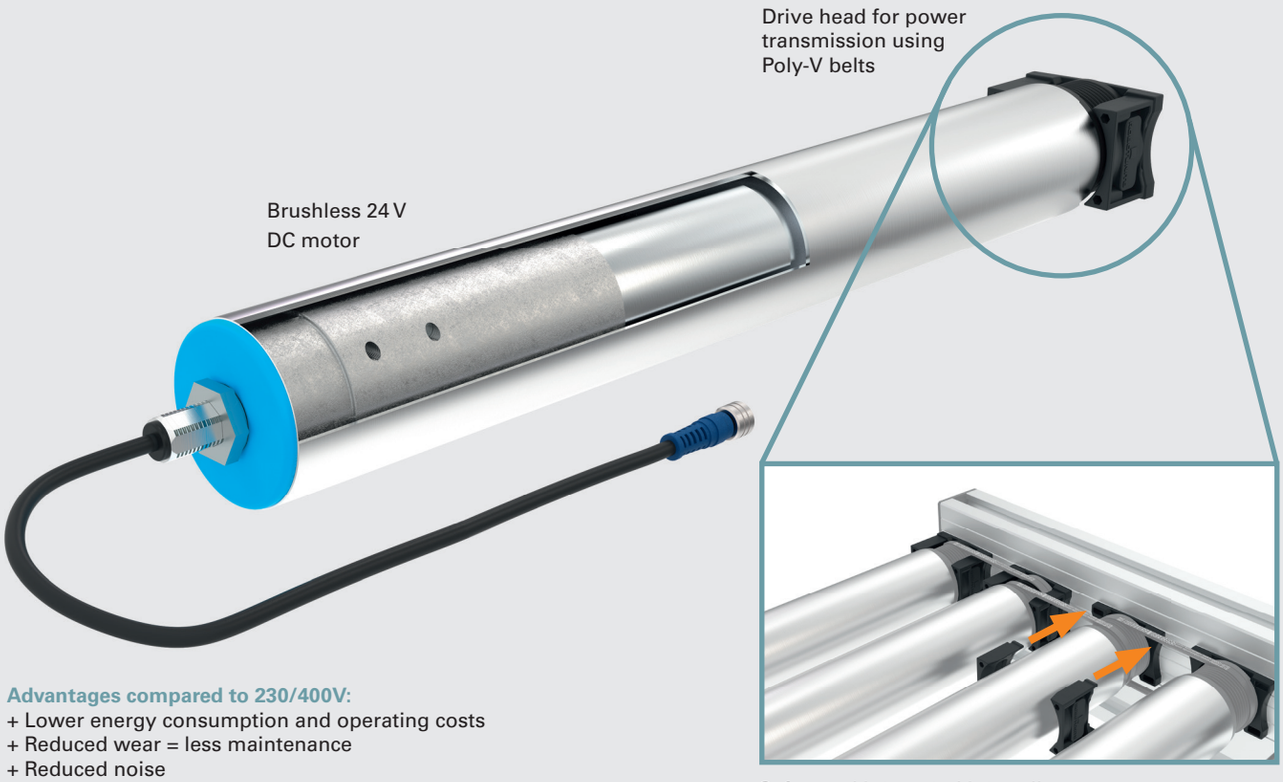

Advantages compared to 230/400V:
+ Lower energy consumption and operating costs
+ Reduced wear = less maintenance
+ Reduced noise

Safeguard integrated into roller

R5S Powered Roller Conveyor Straight

Side Guides for Powered Roller Conveyors see page 49

Lead times:
standard 10 days, express 5 days

Application
Zero pressure accumulation of products in various sizes.

Technical Data
Brushless 24 V DC motor
Speed: from 10 to 30 m/min
Temperature range: from +2°C to +40°C
Max. Continuous current per motorized roller: 2.5 A
Conveyor rollers driven by Poly-V belts
Roller material: galvanized steel
Belt material: Chloroprene with PA tension members
Frame material: clear anodized aluminum
Max. product load: 50 kg

Control Unit:
Completely pre-installed incl. sensors

Supported control protocols:
PROFINET® Modbus CC-Link
EtherNet/IP EtherCAT

Option without side guides

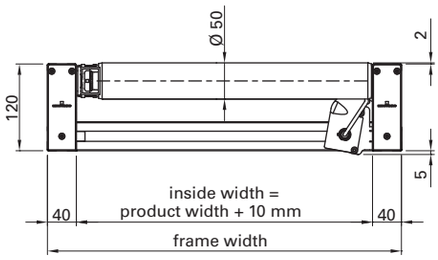

Option with side guides

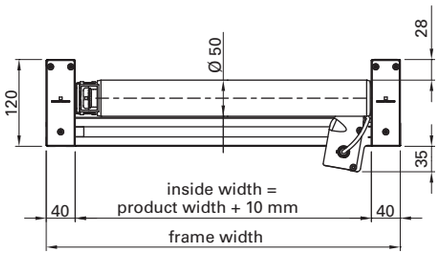

Dimensions

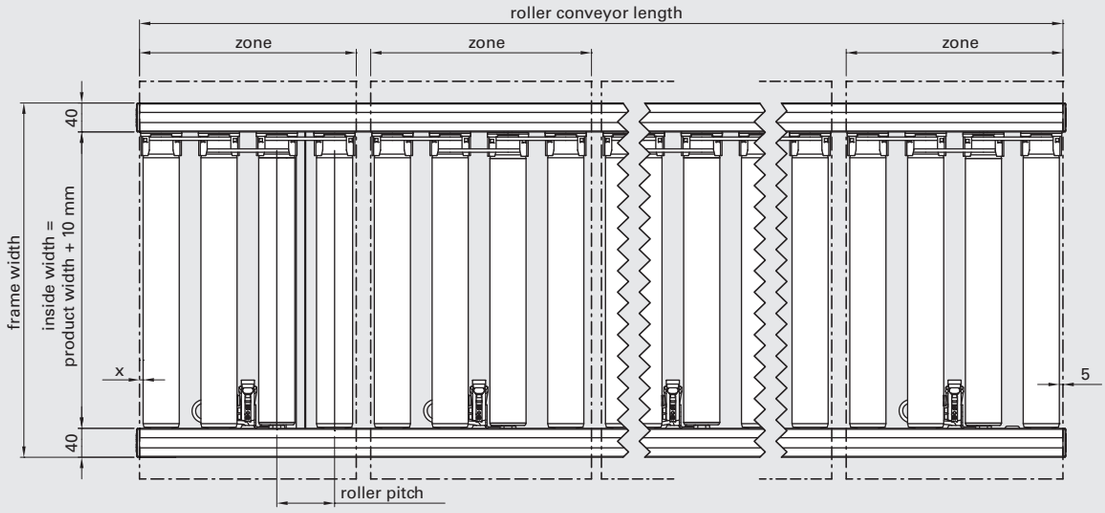

x: Depends on the product length

Standard Widths, Lengths And Roller Pitch

Description	Box (LxW)	Inside width	Frame width	Roller pitch	Standard length up to
Powered Roller Conveyor Straight	400 x 300 mm	310 mm	390 mm	105 mm	6000 mm
Powered Roller Conveyor Straight	300 x 400 mm	410 mm	490 mm	80 mm	6000 mm
Powered Roller Conveyor Straight	600 x 400 mm	410 mm	490 mm	160 mm	6000 mm
Powered Roller Conveyor Straight	600 x 400 mm	610 mm	690 mm	105 mm	6000 mm

Special Dimensions

Special widths (min. inside width 310 mm, max. inside width 1210 mm), special lengths and special roller pitch are available on request.
Guide line for roller pitch calculation = product length in conveying direction / 3.75

R5C Powered Roller Conveyor Curved

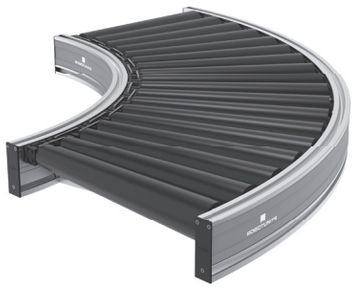

Side Guides for Powered Roller Conveyors
see page 49

Application
Zero pressure accumulation of products in various sizes.

Technical Data
Brushless 24 V DC motor
Speed: from 10 to 30 m/min
Temperature range: from +2°C to +40°C
Max. Continuous current per motorized roller: 2.5 A
Conveyor rollers driven by Poly-V belts
Roller material: galvanized steel, conical plastic attachments
Belt material: Chloroprene with PA tension members
Frame material: clear anodized aluminum
Max. product load: 50 kg

Control Unit:
Completely pre-installed incl. sensors

Supported control protocols:
PROFINET® Modbus CC-Link
EtherNet/IP EtherCAT®

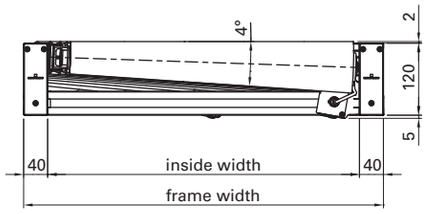

Dimensions

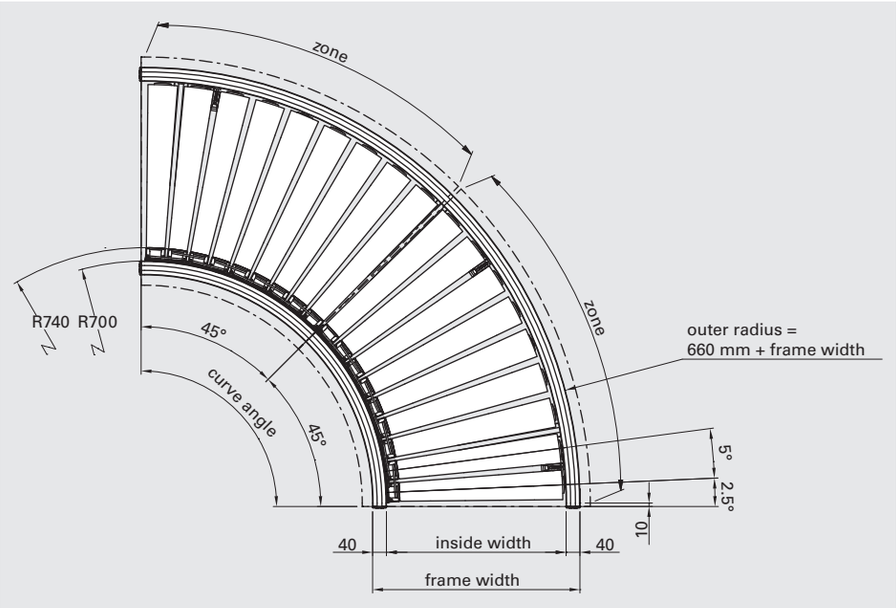

Standard Angles

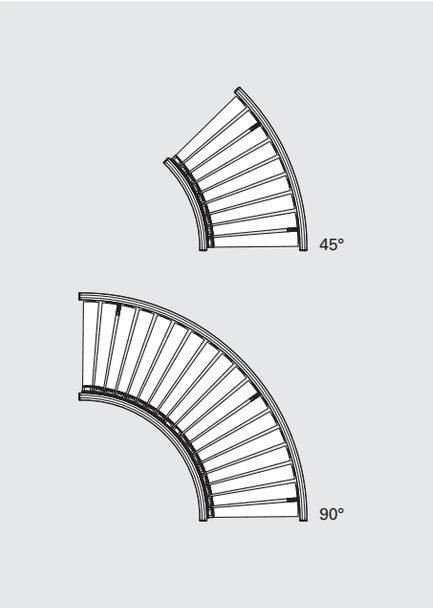

The inside width depends on the dimensions of the transported product. Inside width min. 310 mm, inside width max. 1040 mm
Special curve angles are available on request.

Request For Quote / Order

Please use our request form at www.robotunits.com.

R5T Transfer Unit 90°

Side Guides for Powered Roller Conveyors
see page 49

Application
90 degree transfer of products in various sizes. It can be integrated into any zone of a Powered Roller Conveyor Straight.

Technical Data
Motor: 24 V DC motor for lift motion with a temperature range from +2°C to +40°C
Max. Continuous current per motorized roller: 2.5 A
Roller material: galvanized steel
Timing belt material: PU
Max. product load: 50 kg

Control unit:
Completely pre-installed incl. sensors

Supported control protocols:

PROFINET® Modbus CC-Link
EtherNet/IP EtherCAT®

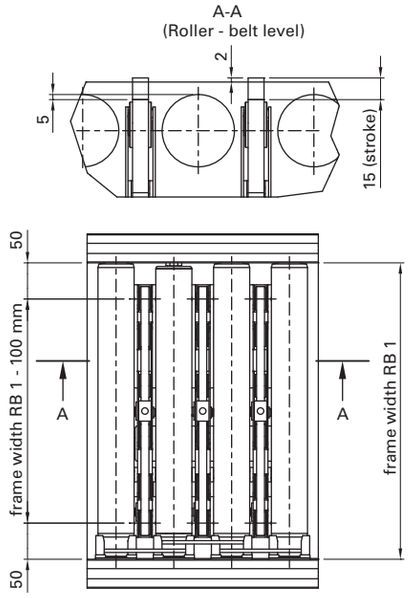

Dimensions

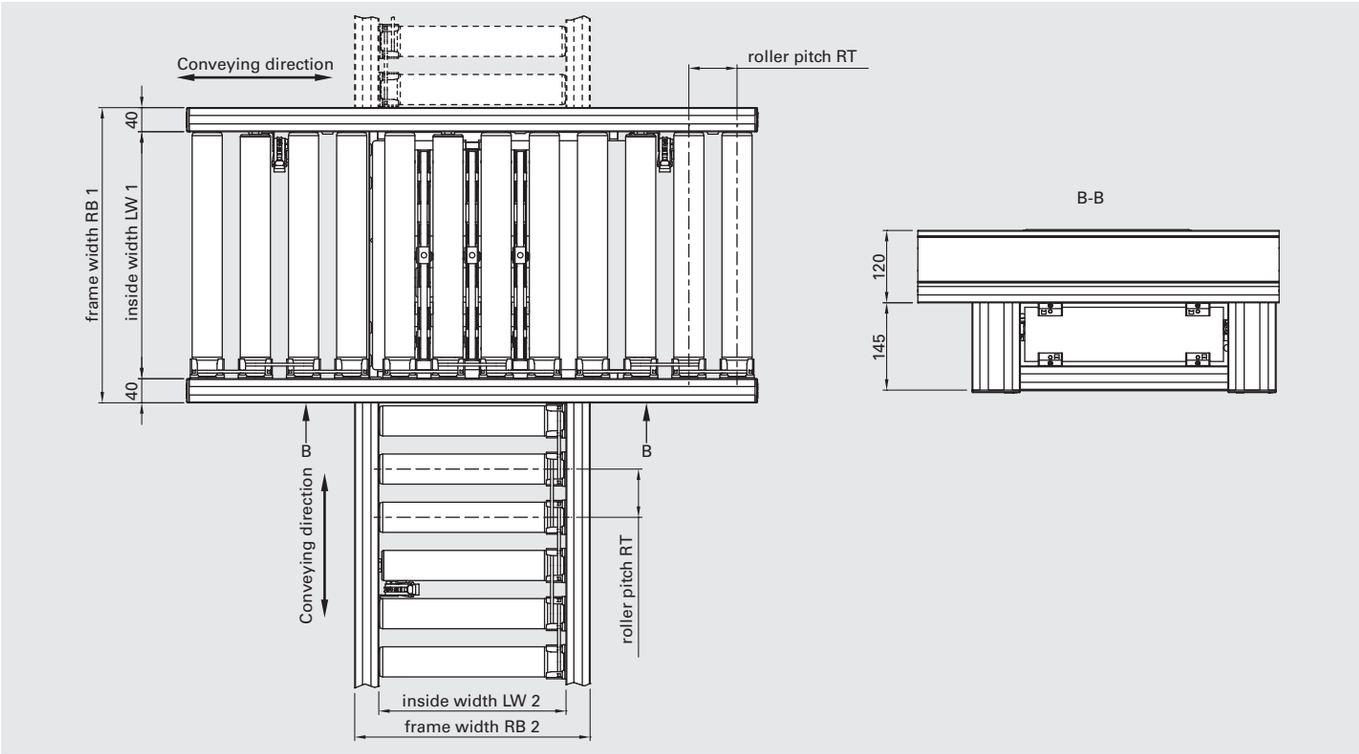

Standard Dimensions

		Powered Roller Conveyor with Transfer Unit 90°			In-feed or out-feed Powered Roller Conveyor		
Description	Box (LxW)	LW 1	RB 1	RT	LW 2	RB 2	RT
Transfer Unit 90°	300 x 400 mm	410 mm	490 mm	80 mm	310 mm	390 mm	80 mm
Transfer Unit 90°	400 x 600 mm	610 mm	690 mm	105 mm	410 mm	490 mm	105 mm

Special dimensions are available on request.

Drawing dimensions in mm

R5R Turntable

Side Guides for Powered Roller Conveyors
see page 49

Application
Correctly positioned turning of products in various sizes

Technical Data
Brushless 24 V DC motor for lift and belt
Temperature range from +2°C to +40°C
Max. Continuous current per motorized roller: 2.5 A
Turning range: 0° – 270°
Cycle time for 90°: 2.5 s
Max. product load: 50 kg

Control unit:
Completely pre-installed incl. sensors

Supported control protocols:

PROFINET® Modbus CC-Link
EtherNet/IP EtherCAT®

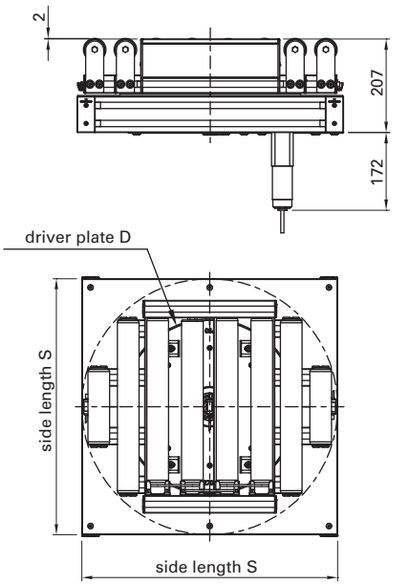

Dimensions

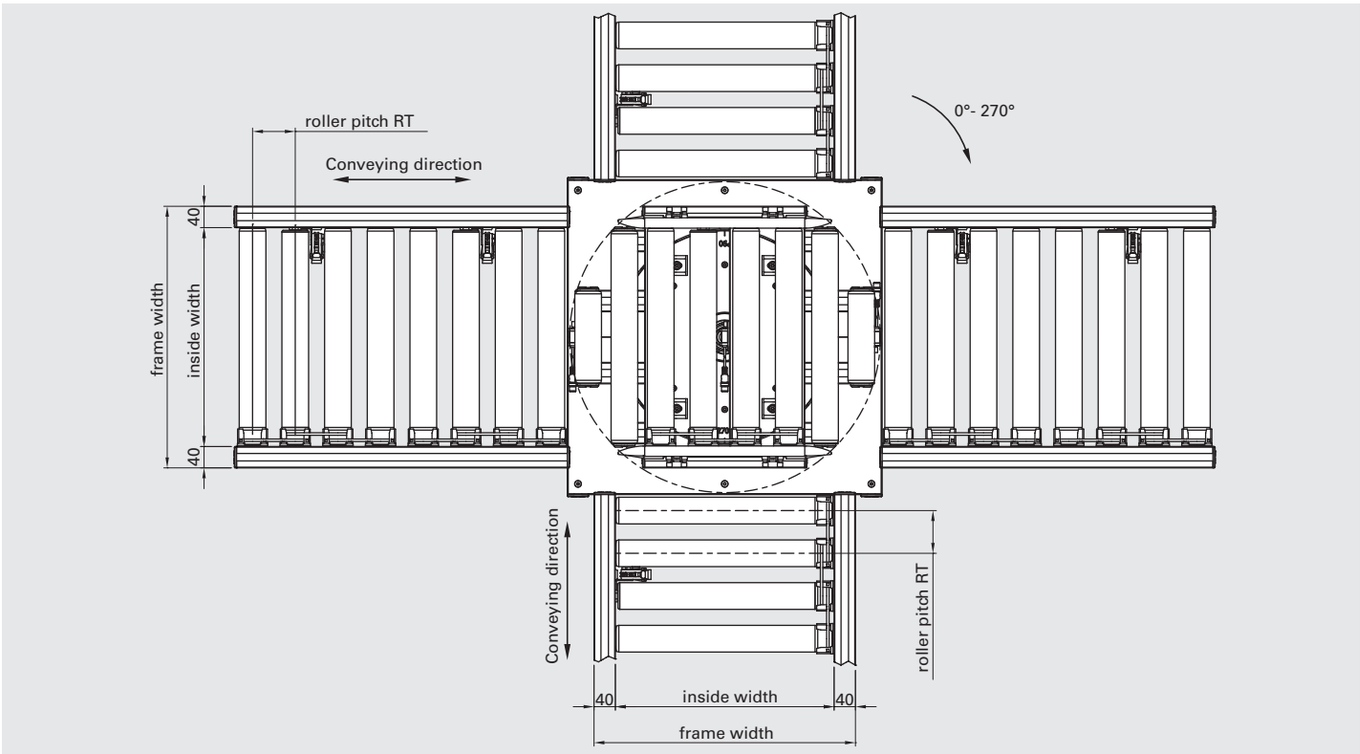

Standard Widths, Lengths And Roller Pitch

		Roller conveyor on the Turntable			Turntable	
Description	Box (LxW)	Inside width	Frame width	Roller pitch	Side length S	Carriage plate D
Turntable	400 x 300 mm	310 mm	390 mm	105 mm	590 mm	Ø 400 mm
Turntable	300 x 400 mm	410 mm	490 mm	80 mm	590 mm	Ø 400 mm
Turntable	600 x 400 mm	410 mm	490 mm	160 mm	790 mm	Ø 630 mm
Turntable	400 x 600 mm	610 mm	690 mm	105 mm	790 mm	Ø 630 mm

Special dimensions are available on request.

Drawing dimensions in mm

R5F Roller Conveyor Stand

Application
Stand for R5S

Technical Data
Material: clear anodized aluminum, galvanized GD-Zn, galvanized steel, PA 6 or rubber

Scope of Delivery
Stand segment fully assembled

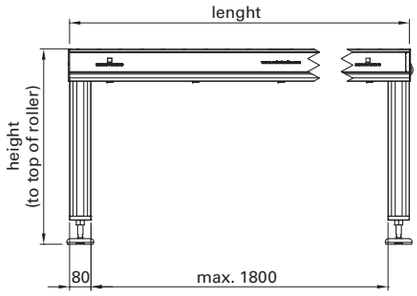

Standard Conveyor Stand

S

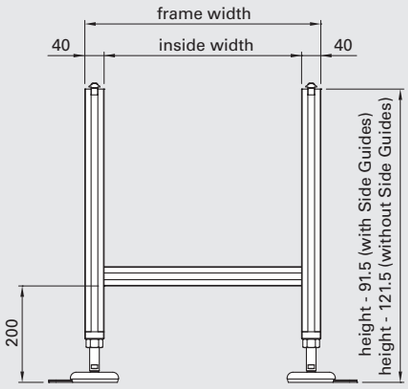

Leveling bases BAS 1120
Height adjustment ± 30 mm

R

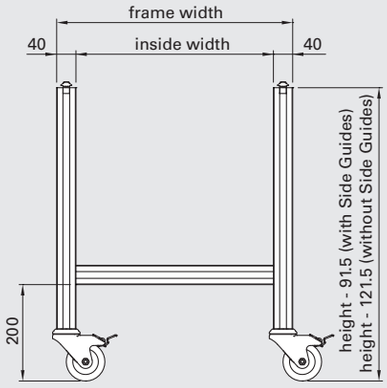

Swivel Castors with brake
CAS 3080

Order Code

	Order Code[1]			
Description		Frame width	Type	Height
Roller Conveyor Stand	R5F	_ _ _ _	_ NN	_ _ _ _

1) Please complete the order code by adding the corresponding parameters for order processing.
Drawing dimensions in mm

R5G Roller Conveyor Stand

Application
Stand for R5C

Technical Data
Material: clear anodized aluminum, galvanized GD-Zn, galvanized steel, PA 6 or rubber

Scope of Delivery
Stand segment fully assembled

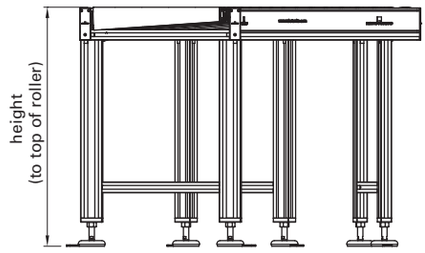

Standard Conveyor Stand

S

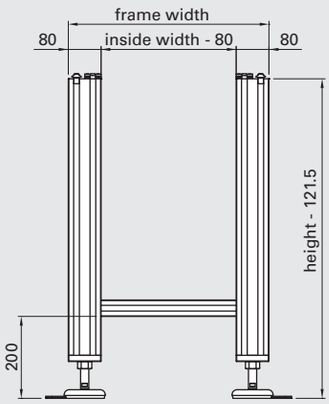

Leveling bases BAS 1120
Height adjustment ± 30 mm

R

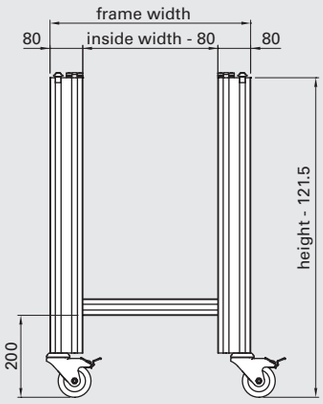

Swivel Castors with brake
CAS 3080

Order Code

Description	Order Code[1]			
		Frame width	Type	Height
Roller Conveyor Stand	R5G	_ _ _ _	_ NN	_ _ _ _

1) Please complete the order code by adding the corresponding parameters for order processing.
Drawing dimensions in mm

Side Guide System for Belt, Timing Belt and Modular Belt Conveyors

Belt Conveyor (integrated)

see catalogue
page 16 (C4N)
page 18 (C5N)
page 20 (C8N)

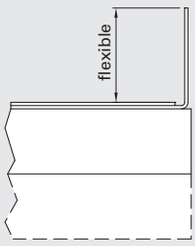

Belt Conveyor

Guide range with standard square tube length: 150 mm (special length possible)

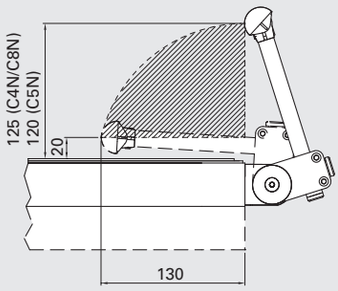

Modular Belt Conveyor

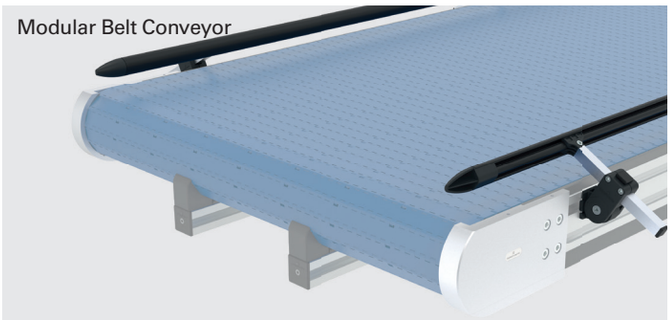

Guide range with standard square tube length: 150 mm (special length possible)

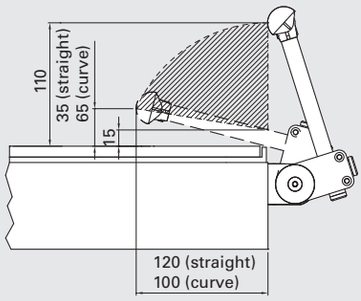

Timing Belt Conveyor

Guide range with standard square tube length: 150 mm (special length possible)

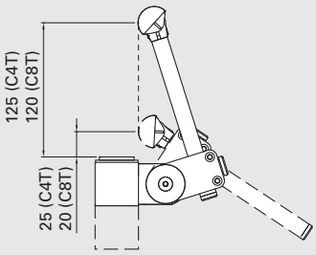

Construction

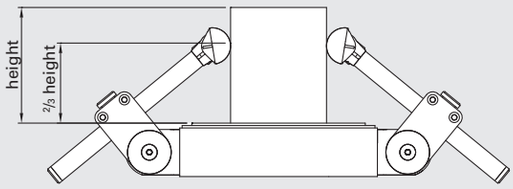

Recommended height for side guide

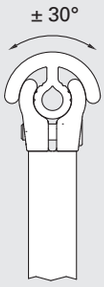

Adjustment range side guide

Side Guide System for Powered Roller Conveyors

Integrated (only with Powered Roller Conveyor Straight)

see catalogue page 42

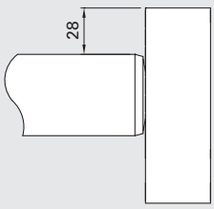

Rigid

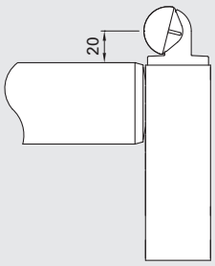

Flexible, with overhang

Guide range with standard square tube length: 150 mm (special length possible)

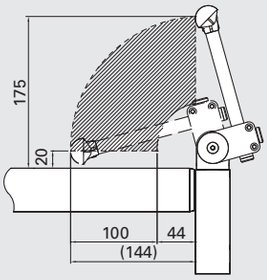

Flexible, without overhang

Guide range with standard square tube length: 30 mm (special length possible)

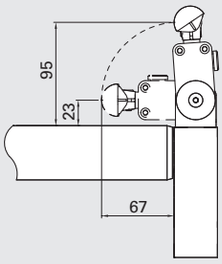

Assembly

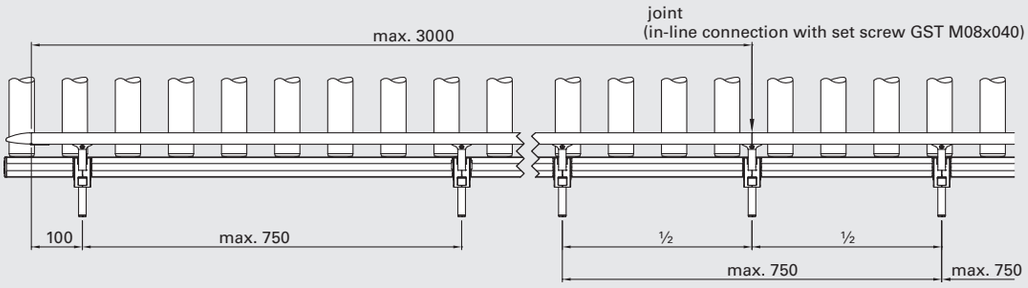

Divide side guide base or clip evenly.
Attention: Do not exceed maximum distances!

COP 4561 Side Guide Base

Application
For individual positioning of side guides

Technical Data
Material:
Basic part: PA6 black
Brackets: PA6 GF30 black
End cap: 18x18 PE-LLD
Hardware material: Galvanized steel

Scope of Delivery
1 Side Guide Basic Part
1 Side Guide Nut Holder
1 Side Guide Bracket Screw
2 Screw IBS M05x025
2 Hexagon nuts SKM M005
1 Screw IBS M08x030 EXNIKO
1 Washer SIS M08x13x0.8
1 Hexagon nut SKM M008
1 CAP 1818 cover cap

Tightening Torque
IBS M05x025 = 6 Nm
IBS M08x030 EXNIKO = 10 Nm

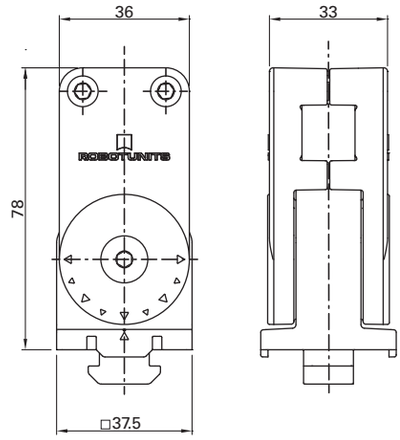

Assembly

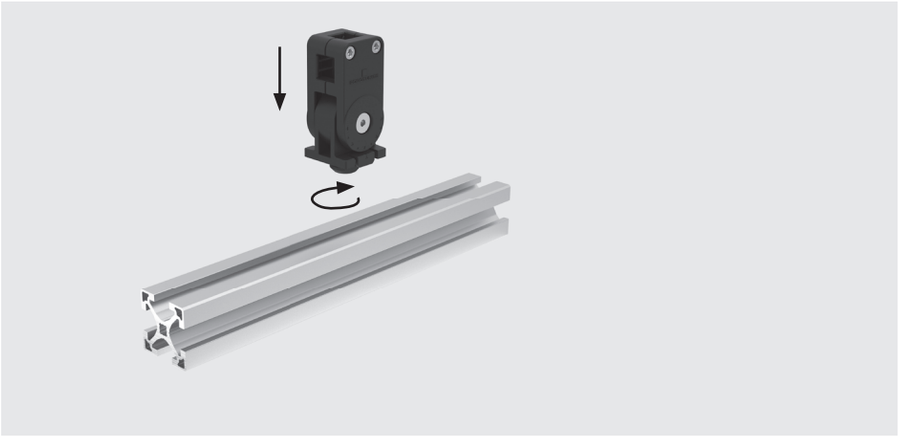

Order Code

Description	Order Code	Weight
Side Guide Base	COP 4561	0.095 kg

CO_ 900_ Side Guide Clamp With Rod

Application
For individual positioning of side guides

Technical Data
Material:
Clamping part: PA6.6 black
End cap: 15x15 PE-LLD
Square tube: Aluminium EN AW-6060-T66
Fixing material: Galvanized steel

Scope of Delivery
1 Side Guide Clamping Part
1 Screw IBS M05x014
1 Hexagon nut SKM M005
1 CAP 1515 cover cap
1 Square tube 15x15 length 150 mm or variable

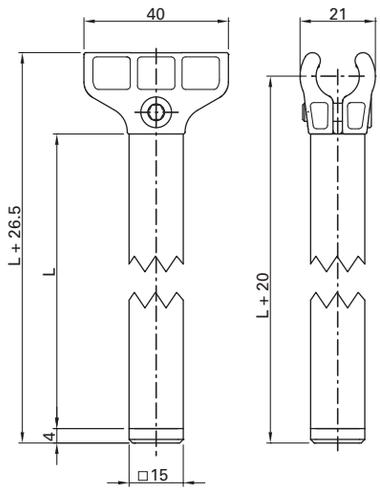

Order Code

Description	Order Code[1] Length	Weight
Side Guide Clamp With Rod, length 150	COP 9001	0.045 kg
Side Guide Clamp With Rod, length variable	COL 9000 SNN ____	

1) Please complete the order code by adding the corresponding parameters for order processing.
Drawing dimensions in mm

COP 4570 Side Guide Clip

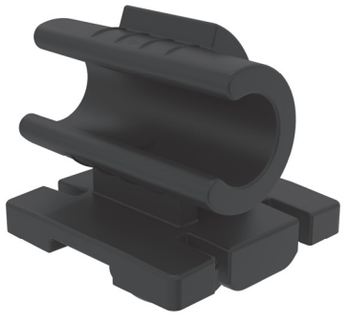

Application
To accomodate side guides

Technical Data
Material: PA6 black

Scope of Delivery
10 Side Guide Clips

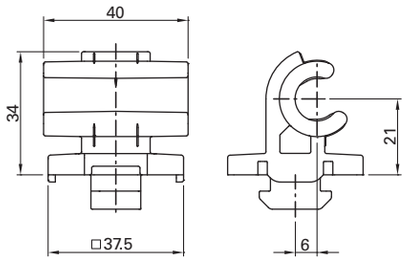

Assembly

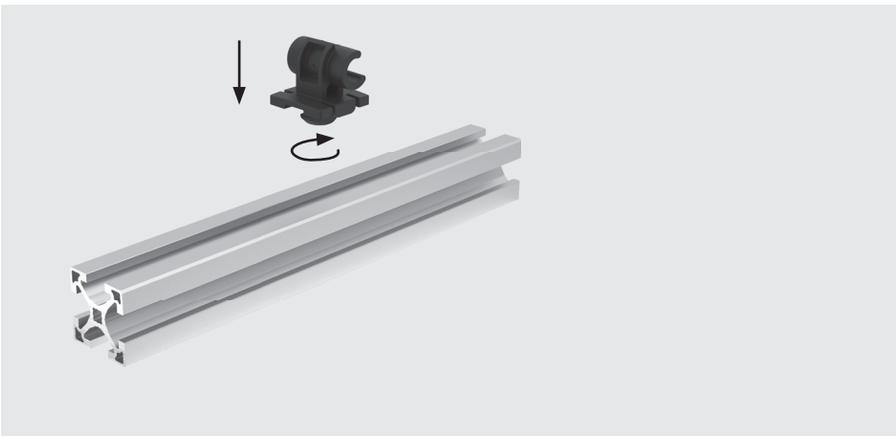

Order Code

Description	Order Code	Weight/Piece
Side Guide Clip Set	COP 4570	0.020 kg

COP 4590 Side Guide End Piece

Application
To cover ends of Side Guides

Technical Data
Material: PP ESD black

Scope of Delivery
4 Side Guide End Pieces

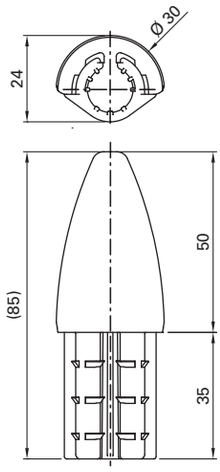

Order Code

Description	Order Code	Weight/Piece
Side Guide End Piece Kit	COP 4590	0.010 kg

COL 4590 Side Guide Plastic

Application
Side Guide for conveyors

Technical Data
Material: PVC-U black

Plastic profile is thermoformable by using a heat gun (softening point 80°C)

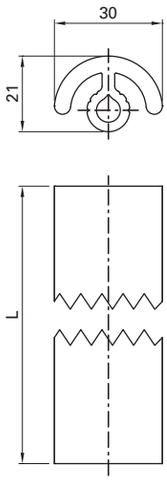

Application

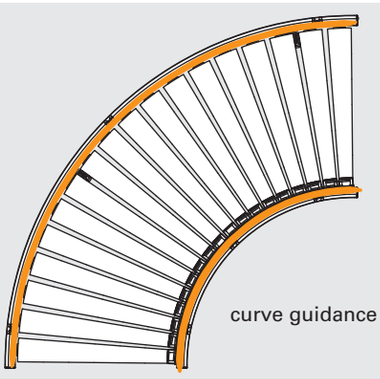

curve guidance

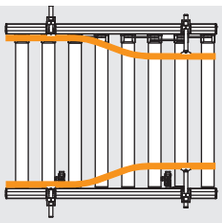

funneling of product

Order Code

Description	Order Code	Weight/Meter
Side Guide Plastic, cut to length	COL 4590 SNN ____	0.340 kg
Side Guide Plastic, stock length 3000 mm	COL 4590 NNN 3000	0.340 kg

THE CUSTOM-MADE LINEAR MOTION SYSTEM

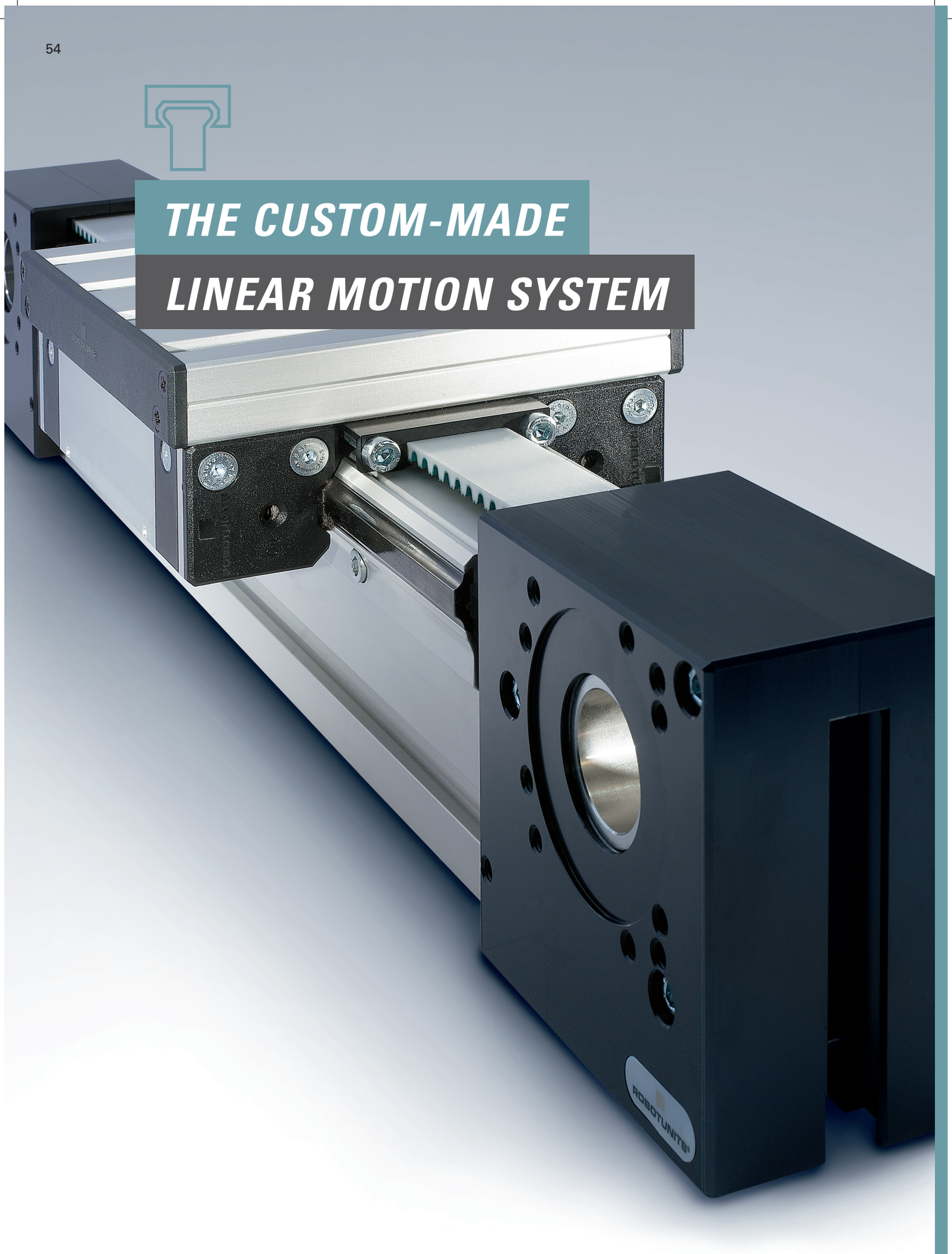

Rob_Kat16.1_Inhalt_e_neu_USA.indd 54 10.06.20 14:47

Customized linear motion technology. Based on our proven Extrusion and Fastening Technology, we have developed Linear Motion Units that meet the highest customer expectations in terms of versatility, stability and efficiency.

Robotunits offers a Linear Motion System of the highest quality and precision, with a maximum potential for cost and time savings in design and assembly.

Fully integrated Linear Motion System
- completely compatible with the entire Modular Automation System
- belt return inside the extrusion
- leaves 3 sides of the extrusion free for additional attachments
- available in 50 mm series

It runs and runs and runs ...
- single or double idlers can be used, depending on the load
- high strength due to special captive design of idler extrusion
- large rollers
- integrated fastening option for Flexible Energy Chain

Guiderails instead of guide systems
- easily mounted guiderails eliminate the need for a separate guide system
- playfree datum edge positioning
- hardened, tempered steel guiderail allow heavier loads
- high wear resistance allows smooth and quiet operation
- quick and easy assembly

Modular design of linear motion units
- customized linear motion units, from single units to complex 3 axis gantry systems
- single and multiple guiderails available in one system
- X-,Y-,Z-combinations possible
- almost limitless combinations

Drive options
- motor selection tailored to performance requirements
- minimal design time through expansion coupling system
- one size pulley for all chassis sizes

Protection against damage
- integrated overrun protection prevents mechanical damage

Save time, cut cost
- easy selection of components
- easy to order
- minimal design time required
- quick and easy attachment of accessories
- easy installation

Rob_Kat16.1_Inhalt_e_neu_USA.indd 55 10.06.20 14:47

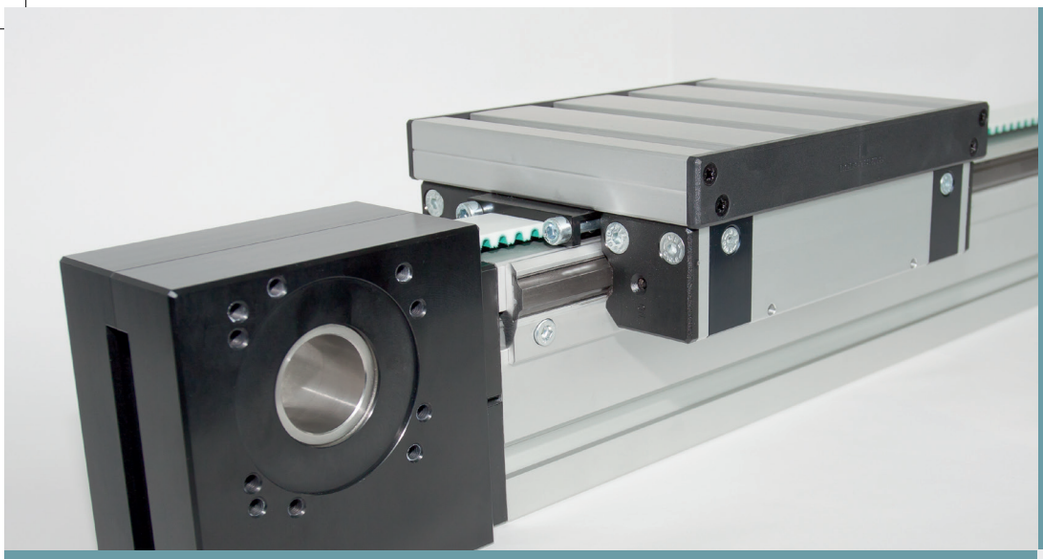

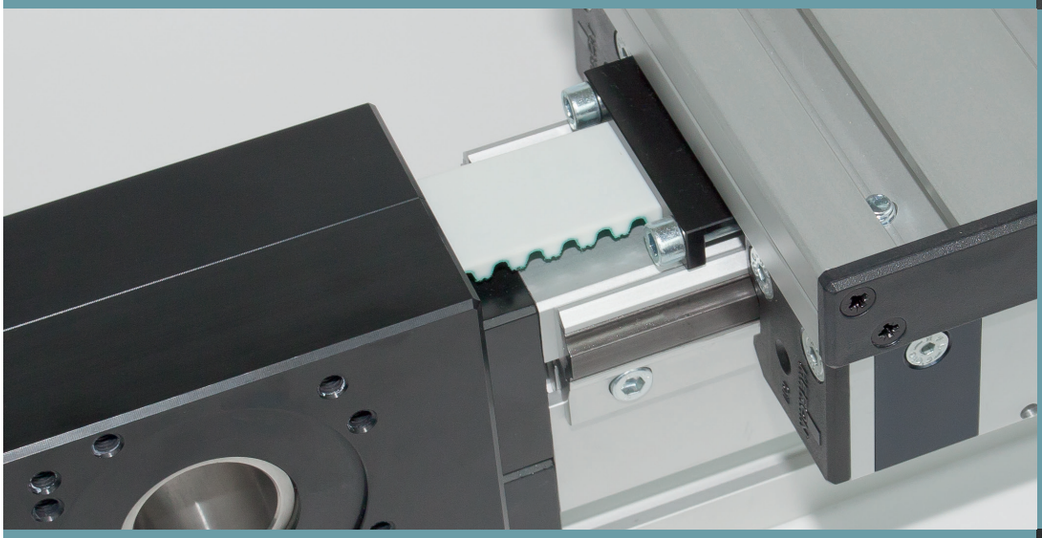

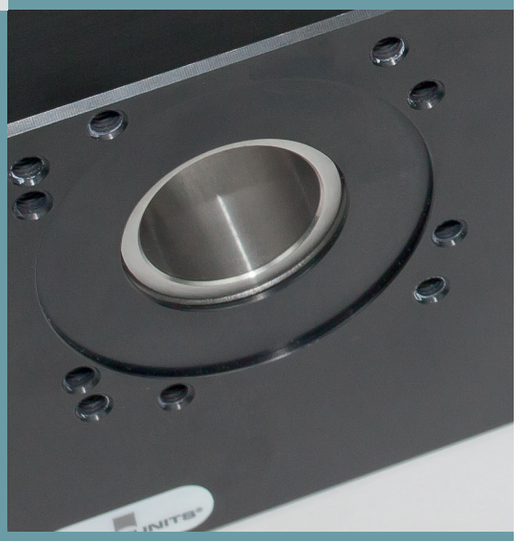

ROBOTUNITS®

The Custom-Made Linear Motion System

Linear Motion Unit 50 Page 60

Linear Motion
Unit 50
LIL 5010

P. 60

Linear Motion Unit 100 Page 61

Linear Motion
Unit 100
LIL 1010

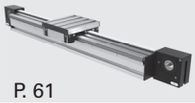

P. 61

Linear Motion Unit 50 With Omega Drive Page 62

Linear Motion Unit
50 With Omega
drive LOL 5010

P. 62

Linear Motion Accessories Overview Page 137

Linear Motion Design

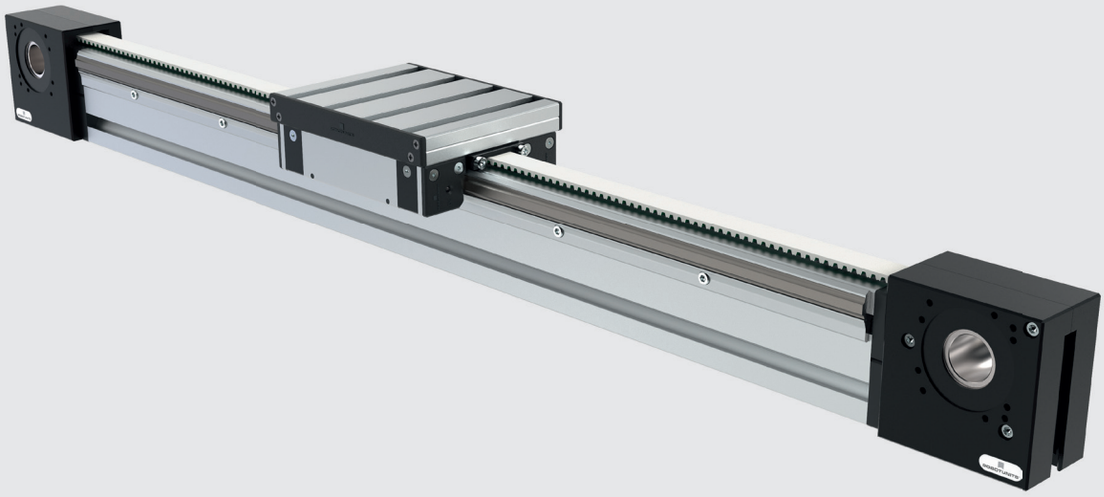

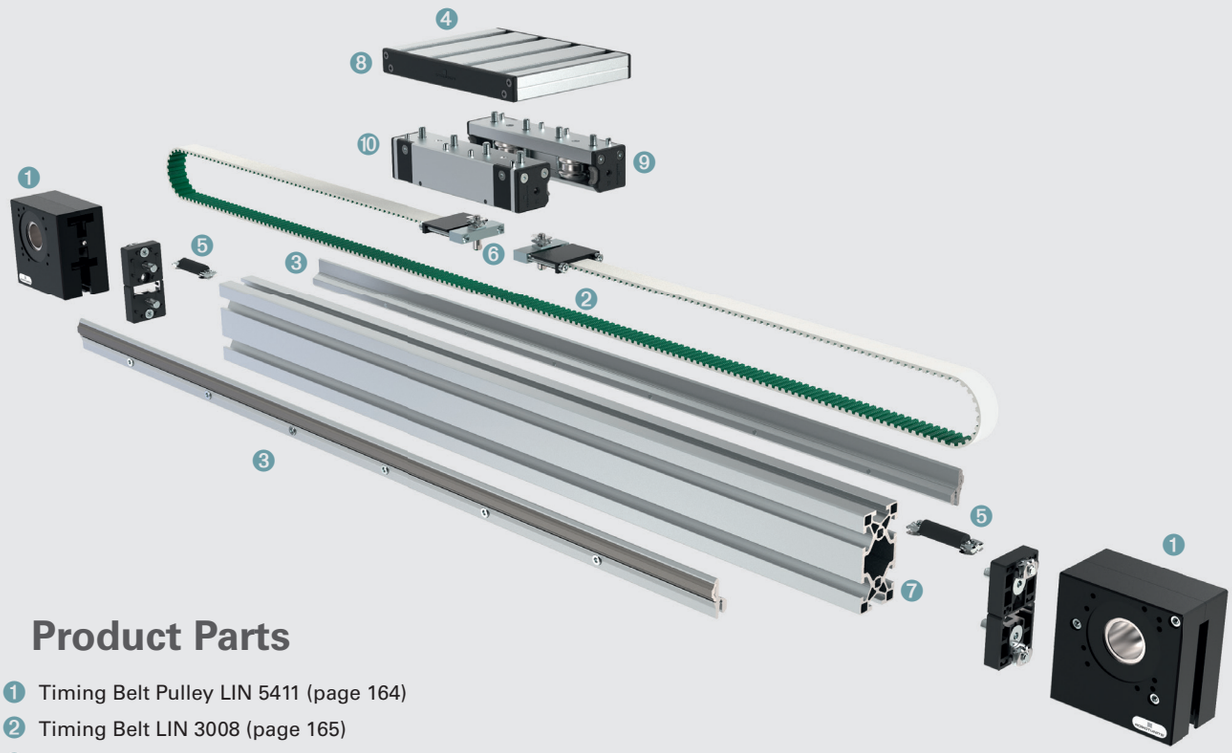

Product Parts

1. Timing Belt Pulley LIN 5411 (page 164)
2. Timing Belt LIN 3008 (page 165)
3. Guiderail LIL 5000 SNN (page 167)
4. Carriage Plates LIN 1501 / LIN 2001 (page 168)
5. Limit Stop LIN 5191 (page 168)
6. Timing Belt Clamp LIN 3221 (page 165)
7. Extrusions, 50x50, 50x100, 50x200, or 100x100 (starting page 72)
8. End Cap CAP 2521 (page 175)
9. Single Idler Kit, concentric LIN 5001 or Double Idler Kit, concentric LIN 5011 (page 166)
10. Single Idler Kit, eccentric LIN 5003 or Double Idler Kit, eccentric LIN 5013 (page 166)

Linear Motion System

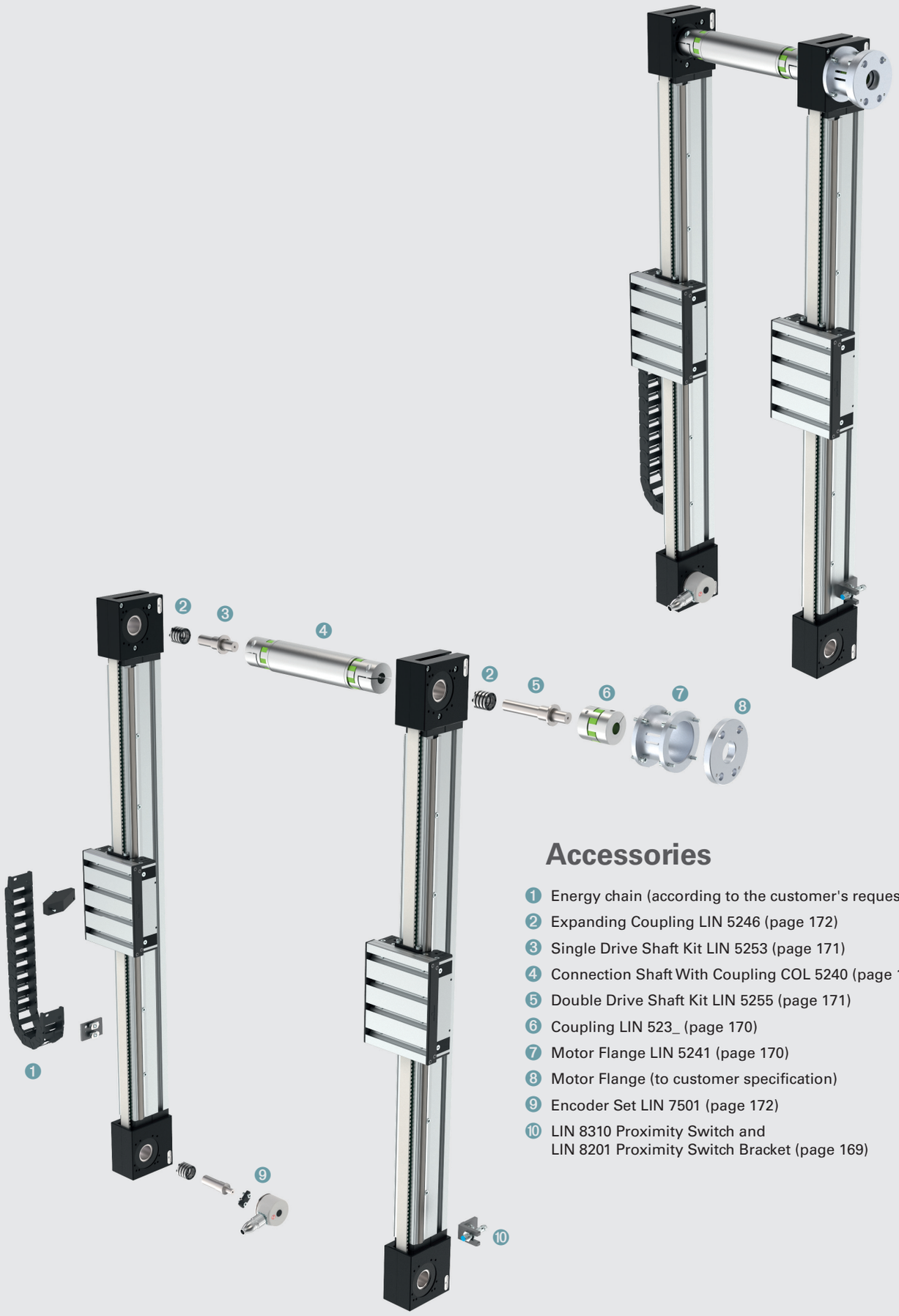

Accessories

1. Energy chain (according to the customer's request)
2. Expanding Coupling LIN 5246 (page 172)
3. Single Drive Shaft Kit LIN 5253 (page 171)
4. Connection Shaft With Coupling COL 5240 (page 173)
5. Double Drive Shaft Kit LIN 5255 (page 171)
6. Coupling LIN 523_ (page 170)
7. Motor Flange LIN 5241 (page 170)
8. Motor Flange (to customer specification)
9. Encoder Set LIN 7501 (page 172)
10. LIN 8310 Proximity Switch and
    LIN 8201 Proximity Switch Bracket (page 169)

LIL 5010 Linear Motion Unit 50

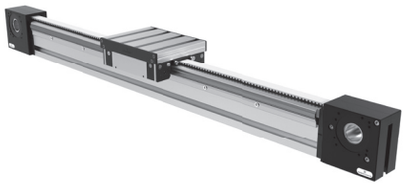

Application
- For transportation and exact postitioning of parts.
- Used as individual units or x-y-z gantries

Technical Data / Scope of Delivery
Base extrusion 50x100 (PIL 5010)
Standard carriage plate: 200x150 mm
Md max.: 60 Nm (max. transmittable drive torque)
Carriage stroke per revolution: 200 mm
Pitch circle diameter: 63.66 mm
Idle torque: 1 Nm
Positioning accuracy: ± 0.2 mm (without drive backlash)
Weight of carriage: 2.66 kg

A Wrench LIN 9990 (page 167) is needed to adjust the eccentric roller

Assembly Instructions
See page 193

Dimensions

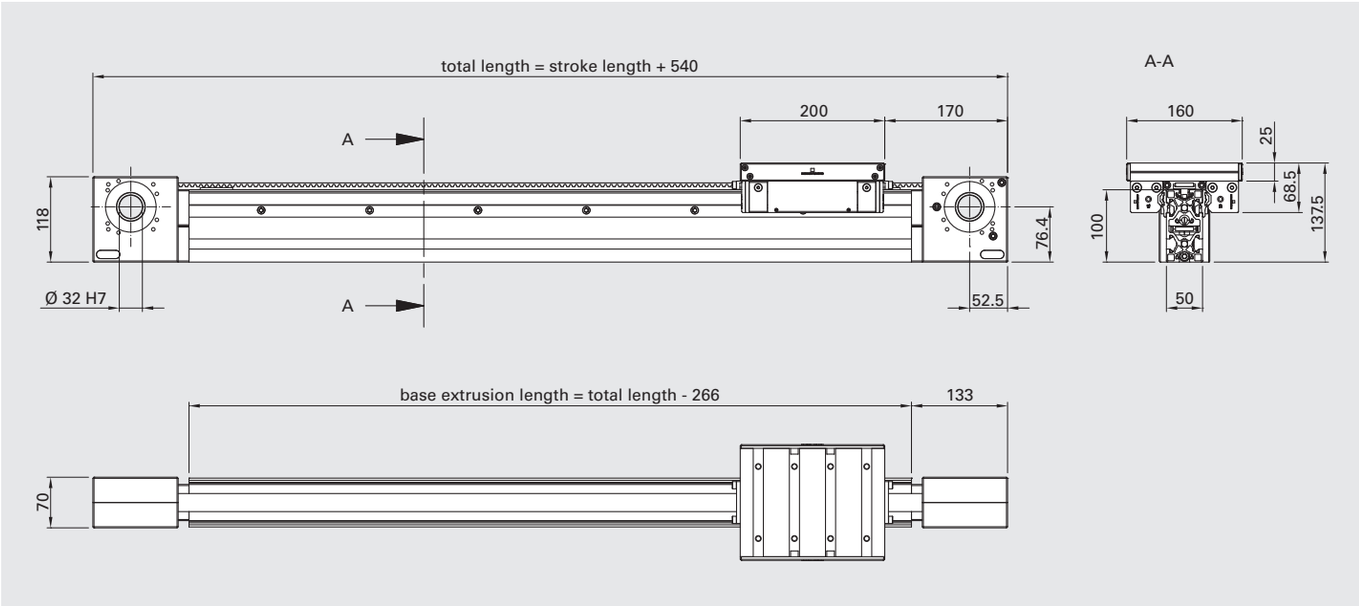

Order Code

Description	Order Code[1]			
		Base Extrusion	Type	Stroke Length[1]
Linear Motion Unit 50	LIL	5010	SNN	____

1) Please complete the order code by adding the desired stroke length in mm.
Drawing dimensions in mm

LIL 1010 Linear Motion Unit 100

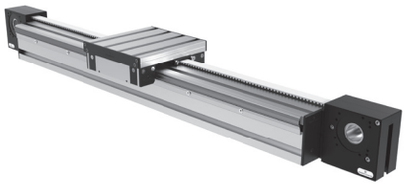

Application
- For transportation and exact postitioning of parts.
- Used as individual units or x-y-z gantries

Technical Data / Scope of Delivery
Base extrusion 100x100 (PIL 1010)
Standard carriage plate: 200x200 mm
Md max.: 60 Nm (max. transmittable drive torque)
Carriage stroke per revolution: 200 mm
Pitch circle diameter: 63.66 mm
Idle torque: 1 Nm
Positioning accuracy: ± 0.2 mm (without drive backlash)
Weight of carriage: 3.04 kg

A Wrench LIN 9990 (page 167) is needed to adjust the eccentric roller

Assembly Instructions
See page 193

Dimensions

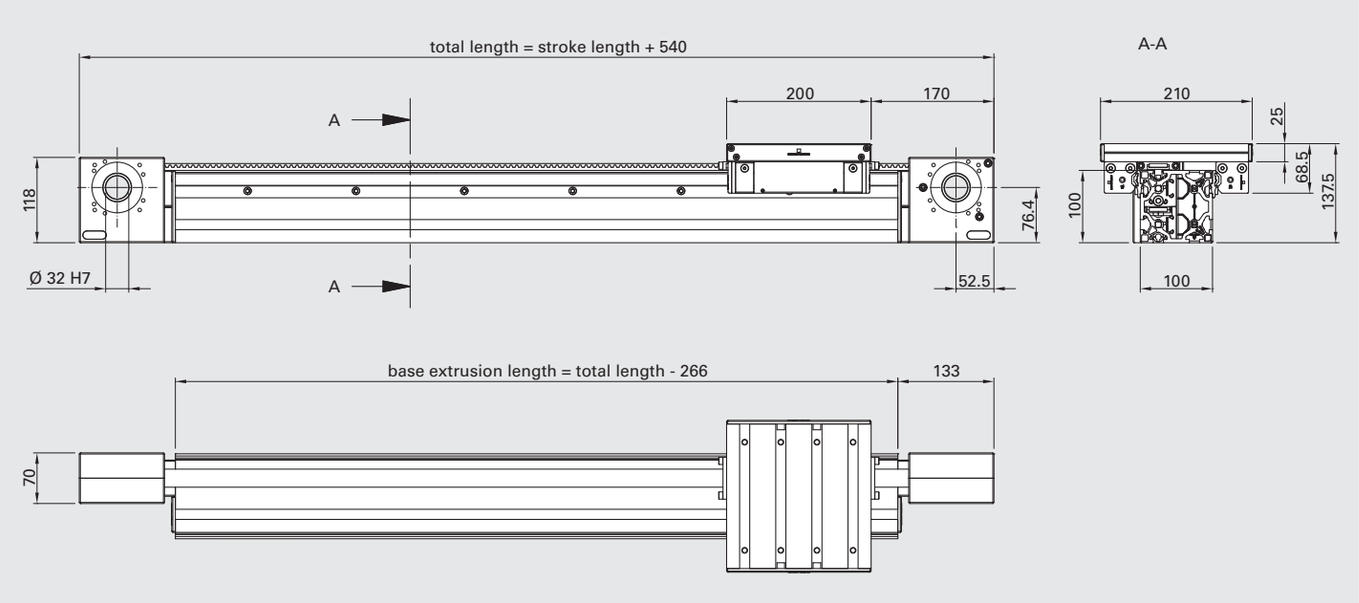

Order Code

Description	Order Code[1]			
		Base Extrusion	Type	Stroke Length[1]
Linear Motion Unit 100	LIL	1010	SNN	____

1) Please complete the order code by adding the desired stroke length in mm.
Drawing dimensions in mm

LOL 5010 Linear Motion Unit 50 With Omega Drive

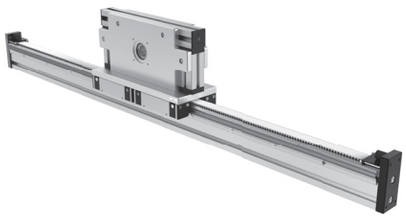

Application
- For transportation and exact postitioning of parts.
- Used as individual units or x-y-z gantries

Technical Data / Scope of Delivery
Base extrusion: 50x100 PIL 5010
Carriage Plate: 400 x 150 mm
Md max.: 60 Nm (max. transmittable drive torque)
Carriage stroke per revolution: 200 mm
Pitch circle diameter: 63.66 mm
Idle torque: 1 Nm
Positioning accuracy: ± 0.2 mm (without drive backlash)
Weight of profile incl. guiderail: 5.4 kg/m
Weight of right and left end parts: 1.2 kg
Weight of drive unit without motor: 15.0 kg

Assembly Instructions
See page 193

A Wrench LIN 9990 (page 155) is needed to adjust the eccentric roller

Dimensions

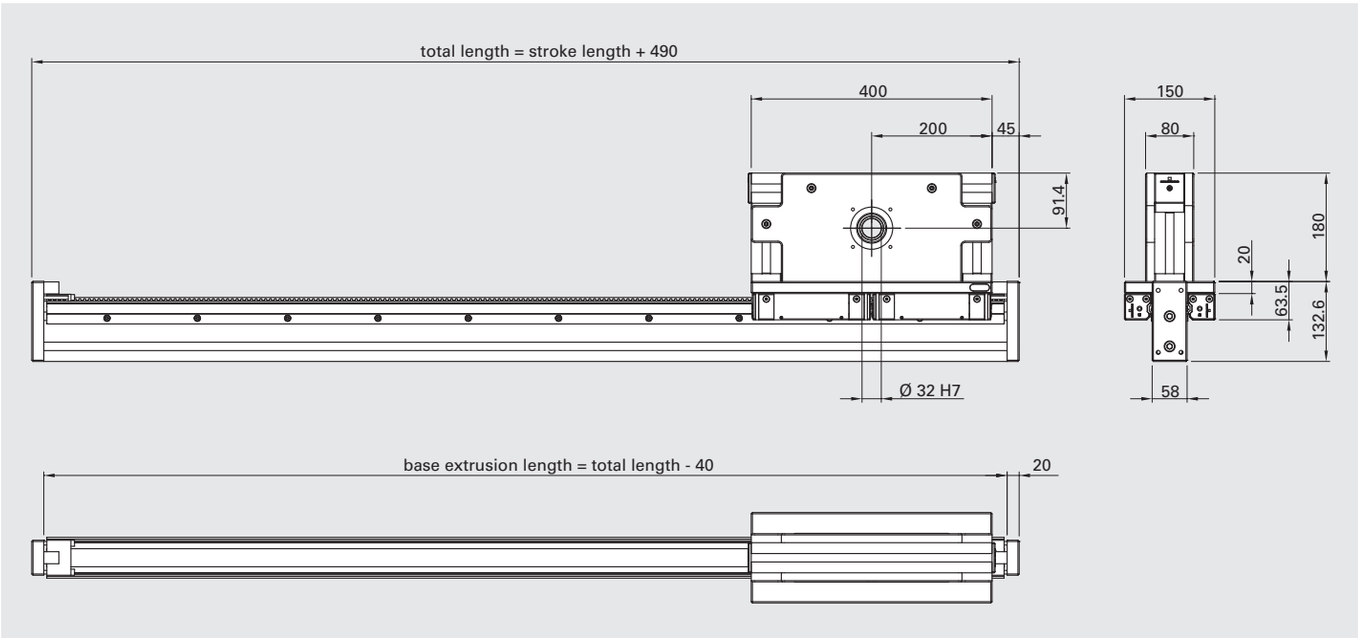

Order Code

Description	Order Code[1]			
		Base Extrusion	Type	Stroke Length[1]
Linear Motion Unit 50 With Omega Drive	LOL	5010	SNN	____

1) Please complete the order code by adding the desired stroke length in mm.
Drawing dimensions in mm

Linear Motion Unit and Lift Application Examples

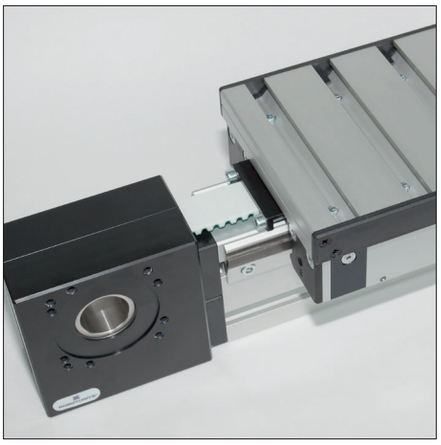
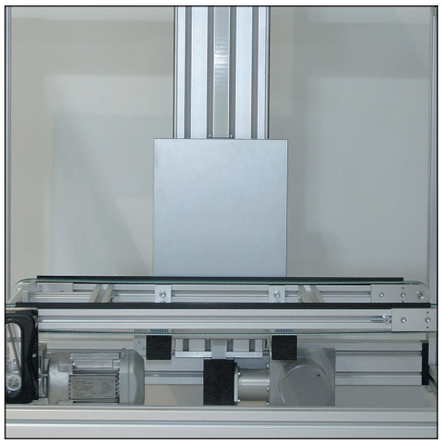
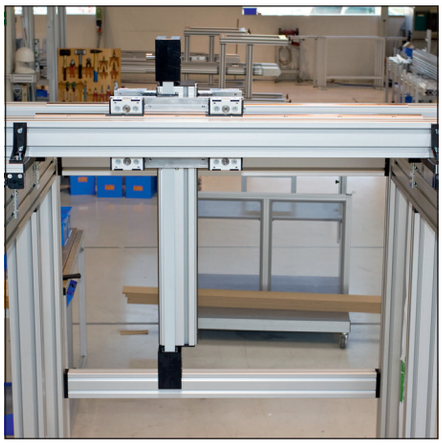
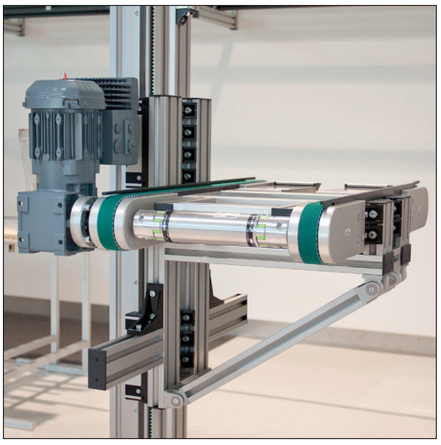
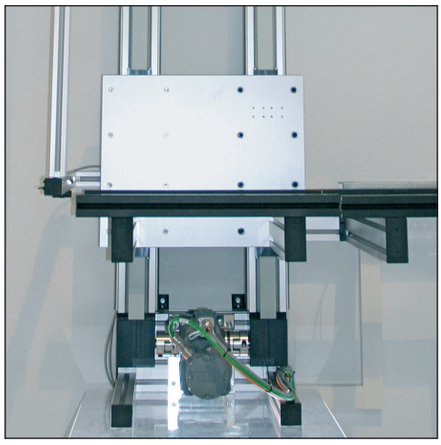

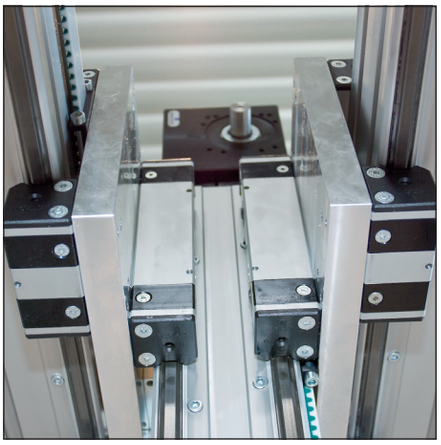
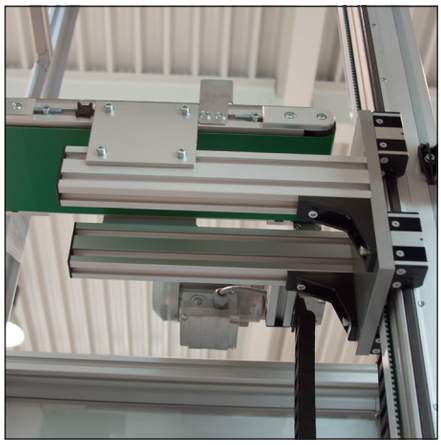
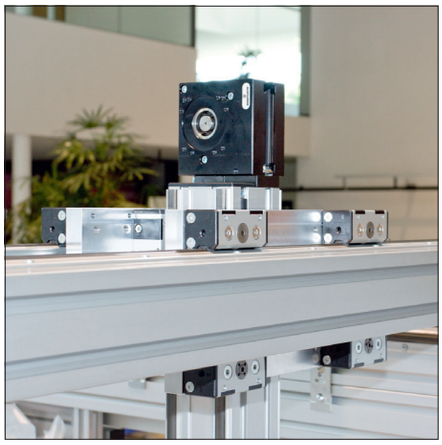
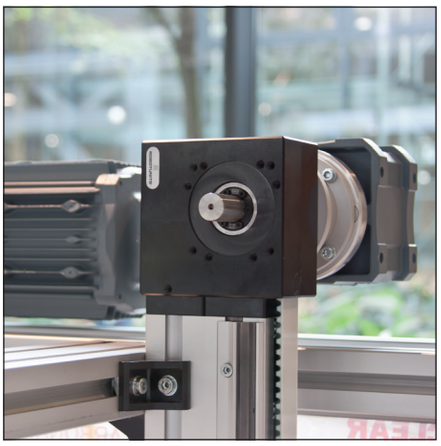
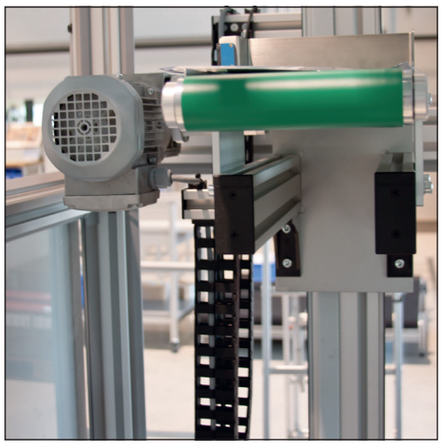
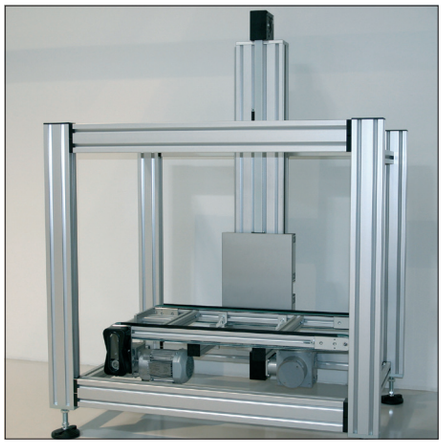

THE SMART EXTRUSION- AND FASTENING TECHNOLOGY

ROBOTUNITS®

The key elements of the Modular Automation System are the unique Extrusion and Fastening Technologies. Extrusions, available in 40 mm and 50 mm size systems, are fully compatible due to a common 14 mm slot size.

In combination with a strong Fastening Technology, the system is unique in its stability and rigidity as well as in its enormous potential for time savings - from design to assembly.

One slot size fits all
- 13 profile shapes in 40 mm and 50 mm extrusion sizes simplify the application
- large, uniform 14 mm wide and 14mm deep T-slot
- same T-slot dimensions for all extrusions in the Modular Automation System
- Post insertion of heavy duty Drop-in Nuts up to M8 possible

Maximum stability
- worldwide unique play-free, accurate and centrally aligned connections
- single fastener provides up to 4 tons of tensile strength
- tubular honeycomb structure for outstanding torsion and load resistance
- maximum stability for all your applications

One fastener, double value
- two-sided fastener provides equal strength on both sides of the connection
- twice the strength for the price of one
- no additional connectors needed
- strength comparable to a welded connection

Any hole drilled is one hole too many
- all connections made without drilling or milling
- maximum wall thickness in key areas
- unlimited re-usability
- for required hole an integrated location groove guarantees precise and straight drilling

Stability increases with every turn
- every turn positions centering inserts tighter into the T-slot
- absolutely play-free, accurate and centrally aligned connection
- concave surface of extrusion guarantees durable vibration resistance
- low fastener height saves space in your design

Inserting the drop-in nut
- Simple and quick insertion of the drop-in nut into the 14 mm wide T-slot
- leaf spring assembly protects drop-in nut against unintended movement, guaranteed contact surface
- to position the the drop-in nut, just slide to stop position

Anything is possible - even post assembly
- simple post-assembly integration of struts without dismantling the frame
- easy repositioning of struts at any time
- no cutting of existing structures
- no surface treatment required

Save time, cut cost
- minimum assembly time required
- simple and quick selection of Extrusion and Fastening Technology
- no measuring of boreholes and no drawings necessary
- length of the extrusion is the only measurement needed
- labeled and tapped extrusions allow immediate assembly

The Smart Extrusion Technology

Extrusion, 40 mm Series

Page 68

Extrusion 16x40
PIL 1640

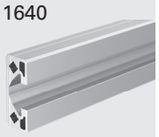

P. 68

Extrusion 40x40
PIL 4040

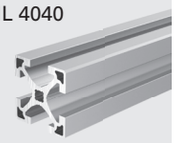

P. 68

Extrusion 40x80
PIL 4080

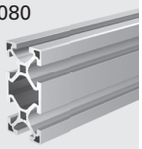

P. 69

Extrusion 80x80
PIL 8080

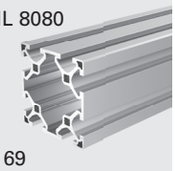

P. 69

Lean Line Extrusion
40x40
PIL 4140

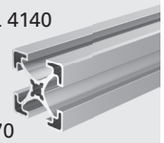

P. 70

Lean Line Extrusion
40x80
PIL 4180

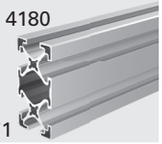

P. 71

Extrusion 40x120
PIL 4012

P. 71

Extrusion, 50 mm Series

Page 72

Extrusion 50x50
PIL 5050

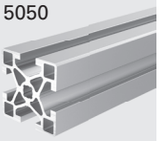

P. 72

Extrusion 50x100
PIL 5010

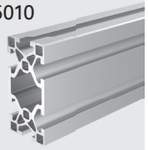

P. 72

Extrusion 50x200
PIL 5020

P. 73

Extrusion 100x100
PIL 1010

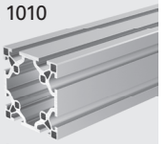

P. 74

Extrusion 100x200
PIL 1020

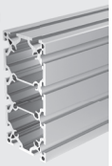

P. 74

Extrusion 25x200
PIL 2520

P. 75

The Strong Fastening Technology

Fastening Technology 40 mm Series Page 76

Fastener 16x40
FAS 1641

P. 76

Fastener 40x40
FAS 404_

P. 76

Fastener 40x80
FAS 408_

P. 77

Surface Fastener
40 x 40
FAS 4049
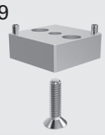
P. 78

End-to-End Fastener
40x40
FAS 4051
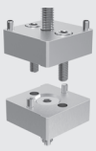
P. 78

Angle Fastener 45°
GUS 4541

P. 79

Elbow Joint
GUS 4_41

P. 79

Fastening Technology 50 mm Series Page 80

Fastener 50x50
FAS 505_

P. 80

Surface Fastener
50x50
FAS 505_

P. 82

End-to-End Fastener 50x50
FAS 5061

P. 83

Fastener 100x200
FAS 102_
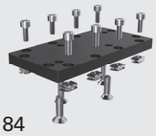
P. 84

Fastening Technology 40 mm and 50 mm Series Page 85

Bracket 40
GUS 450_

P. 85

Fixing Bracket
35x25
GUS 4651

P. 86

Bracket 100
GUS 100_

P. 87

Corner Bracket 100,
one side centered
GUS 110_

P. 87

Drop-In Nut
TIN 45__
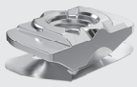
P. 88

Inserter
TIN 9990

P. 88

T-Nut
TIN 60__
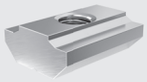
P. 89

T-Nut Bar
TIN _000
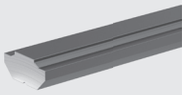
P. 90

T-Nut In-Line
Fastener
TIN 0171

P. 90

Miter Fastener
TIN 4545

P. 91

Special Fastener
TIN _000

P. 91

PIL 1640 Extrusion 16x40

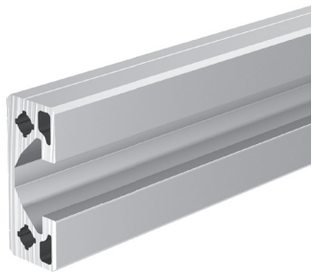

Application
- Signs, shelves, racks
- Hand rails, guide rails
- MRO equipment
- etc.

Technical Data
Material: EN AW-6063-T66 clear anodized aluminum

Section modulus	W_x:	2.9 cm³
Section modulus	W_y:	1.0 cm³
Geometrical moment of inertia:		
against x	I_x:	5.8 cm⁴
against y	I_y:	0.8 cm⁴
against torsion	I_t:	0.6 cm⁴
Cross sectional area	A:	323.6 mm²

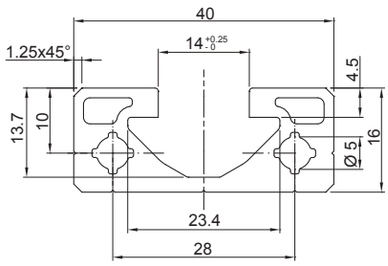

Tolerances and Deflection
see pages 196 to 197

Order Code

Description	Order Code[1] Length	Weight/Meter
Extrusion, cut to length, M6 tapped on both ends, 15 mm deep	PIL 1640 SNN ____	0.890 kg
Extrusion, stock length: 6050 mm (usable length 6000 mm)	PIL 1640 NNN 6050	0.890 kg

PIL 4040 Extrusion 40x40

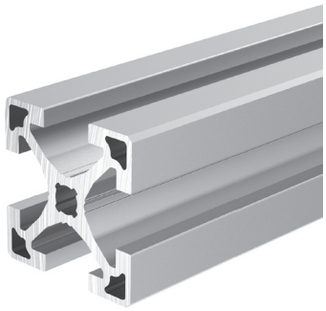

Application
- Machine guardings
- Enclosures
- Safety fence panels & doors
- Light weight machine frames
- Shelves, racks, trolleys (MRO equipment)
- etc.

Technical Data
Material: EN AW-6063-T66 clear anodized aluminum

Section modulus	$W_x = W_y$:	4.3 cm³
Geometrical moment of inertia:		
against x + y	$I_x = I_y$:	8.6 cm⁴
against torsion	I_t:	0.7 cm⁴
Cross sectional area	A:	554.6 mm²

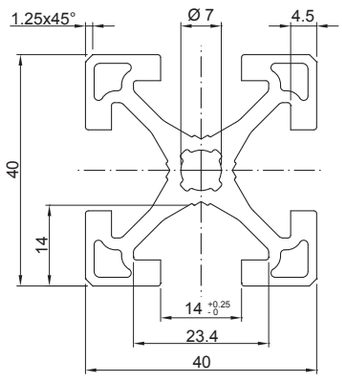

Tolerances and Deflection
see pages 196 to 197

Order Code

Description	Order Code[1] Length	Weight/Meter
Extrusion, cut to length, M8 tapped on both ends, 50 mm deep	PIL 4040 SNN ____	1.530 kg
Extrusion, stock length: 6050 mm (usable length 6000 mm)	PIL 4040 NNN 6050	1.530 kg
Extrusions, 80 units, stock length 6050 mm (usable length 6000 mm)	PIL 4040 PAC 0080	1.530 kg

1) Please complete the order code by adding the desired length.
Drawing dimensions in mm

PIL 4080 Extrusion 40x80

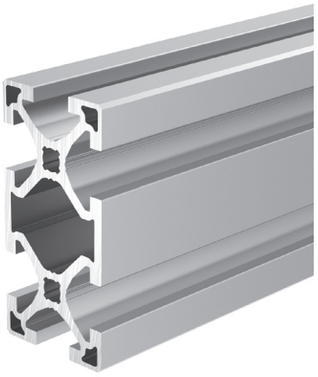

Application
- Machine guardings
- Enclosures
- Safety fence panels & doors
- Machine frames
- Workstations
- Shelves, racks, trolleys (MRO equipment)
- etc.

Technical Data
Material: EN AW-6063-T66 clear anodized aluminum

Section modulus	W_x:	15.4 cm³
Section modulus	W_y:	8.4 cm³
Geometrical moment of inertia:		
against x	I_x:	61.6 cm⁴
against y	I_y:	16.8 cm⁴
against torsion	I_t:	9.3 cm⁴
Cross sectional area	A:	1013.2 mm²

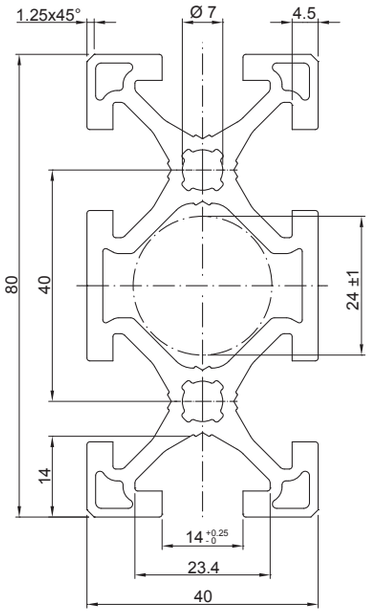

Tolerances and Deflection
see pages 196 to 197

Order Code

Description	Order Code[1] Length	Weight/Meter
Extrusion, cut to length, M8 tapped on both ends, 50 mm deep	PIL 4080 SNN ____	2.780 kg
Extrusion, stock length: 6050 mm (usable length 6000 mm)	PIL 4080 NNN 6050	2.780 kg
Extrusions, 40 units, stock length 6050 mm (usable length 6000 mm)	PIL 4080 PAC 0040	2.780 kg

PIL 8080 Extrusion 80x80

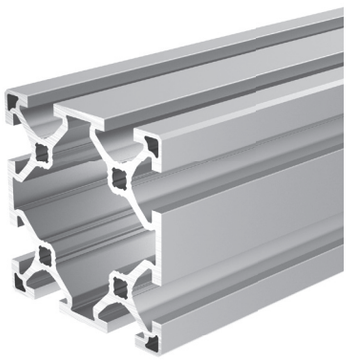

Application
- Machine frames
- Workstations
- Machine guardings
- Enclosures
- Shelves, racks, trolleys (MRO equipment)
- etc.

Technical Data
Material: EN AW-6063-T66 clear anodized aluminum

Section modulus	$W_x = W_y$:	28.0 cm³
Geometrical moment of inertia:		
against x + y	$I_x = I_y$:	112.0 cm⁴
against torsion	I_t:	59.5 cm⁴
Cross sectional area	A:	1547.0 mm²

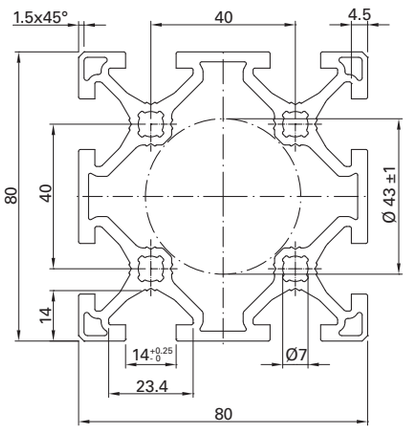

Tolerances and Deflection
see pages 196 to 197

Order Code

Description	Order Code[1] Length	Weight/Meter
Extrusion, cut to length, M8 tapped on both ends, 50 mm deep	PIL 8080 SNN ____	4.280 kg
Extrusion, stock length: 6050 mm (usable length 6000 mm)	PIL 8080 NNN 6050	4.280 kg
Extrusions, 25 units, stock length 6050 mm (usable length 6000 mm)	PIL 8080 PAC 0025	4.280 kg

1) Please complete the order code by adding the desired length.
Drawing dimensions in mm

PIL 4140 Lean Line Extrusion 40x40

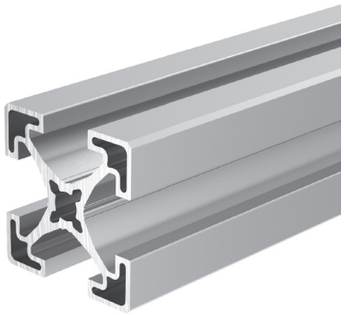

Application
- Machine guardings
- Enclosures
- Safety fence panels
- Light weight machine frames
- Workstations
- Shelves, racks, trolleys (MRO equipment)
- etc.

Technical Data
Material: EN AW-6063-T66 clear anodized aluminum

Section modulus	$W_x = W_y$:	3.3 cm^3
Geometrical moment of inertia:		
against x + y	$I_x = I_y$:	6.5 cm^4
against torsion	I_t:	0.6 cm^4
Cross sectional area	A:	431.0 mm^2

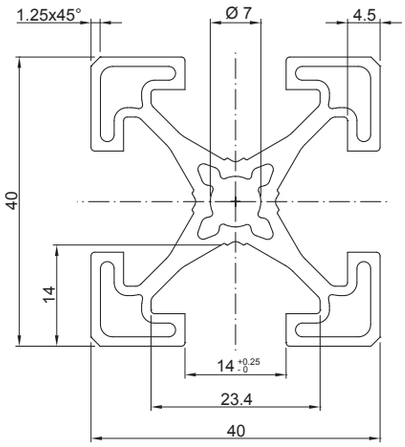

Tolerances and Deflection
see pages 196 to 197

Order Code

Description	Order Code[1] Length	Weight/Meter
Extrusion, cut to length, M8 tapped on both ends, 50 mm deep	PIL 4140 SNN ____	1.160 kg
Extrusion, stock length: 6050 mm (usable length 6000 mm)	PIL 4140 NNN 6050	1.160 kg
Extrusions, 80 units, stock length 6050 mm (usable length 6000 mm)	PIL 4140 PAC 0080	1.160 kg

PIL 4180 Lean Line Extrusion 40x80

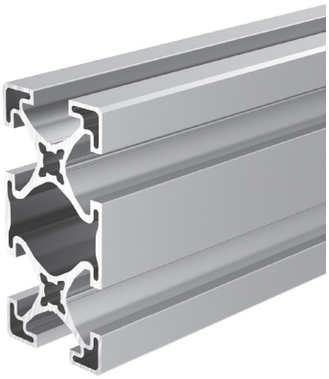

Application
- Machine guardings
- Enclosures
- Safety fence panels
- Light weight machine frames
- Workstations
- Shelves, racks, trolleys (MRO equipment)
- etc.

Technical Data
Material: EN AW-6063-T66 clear anodized aluminum

Section modulus	W_x:	11.9 cm^3
Section modulus	W_y:	6.4 cm^3
Geometrical moment of inertia:		
against x	I_x:	47.4 cm^4
against y	I_y:	12.8 cm^4
against torsion	I_t:	5.9 cm^4
Cross sectional area	A:	790.8 mm^2

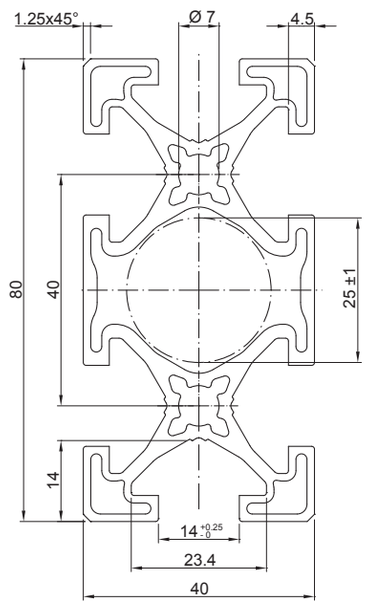

Tolerances and Deflection
see pages 196 to 197

Order Code

Description	Order Code[1] Length	Weight/Meter
Extrusion, cut to length, M8 tapped on both ends, 50 mm deep	PIL 4180 SNN ____	2.140 kg
Extrusion, stock length: 6050 mm (usable length 6000 mm)	PIL 4180 NNN 6050	2.140 kg
Extrusions, 40 units, stock length 6050 mm (usable length 6000 mm)	PIL 4180 PAC 0040	2.140 kg

1) Please complete the order code by adding the desired length.
Drawing dimensions in mm

PIL 4012 Extrusion 40x120

Application
- Roller conveyor
- Cable ducts
- Manual workstations
- In- and outfeed conveyors

Technical Data

Material: clear anodized aluminum

Section modulus	W_x:	27.6 cm^3
Section modulus	W_y:	6.8 cm^3
Geometrical moment of inertia:		
against x	I_x:	182.2 cm^4
against y	I_y:	19.3 cm^4
against torsion	I_t:	1.2 cm^4
Cross sectional area	A:	1108.8 mm^2

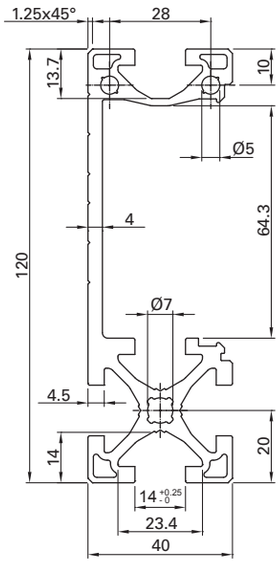

Tolerances and Deflection
see pages 196 to 197

Cover Extrusion For PIL 4012
see pages 174

Order Code

Description	Order Code[1] Length	Weight/Meter
Extrusion, cut to length, M6 or M8 tapped on both ends, 50 mm deep	PIL 4012 SNN ____	3.050 kg
Extrusion, stock length: 6050 mm (usable length 6000 mm)	PIL 4012 NNN 6050	3.050 kg
Extrusions, 24 pcs., stock length: 6050 mm (usable length 6000 mm)	PIL 4012 PAC 0024	3.050 kg

PIL 5050 Extrusion 50x50

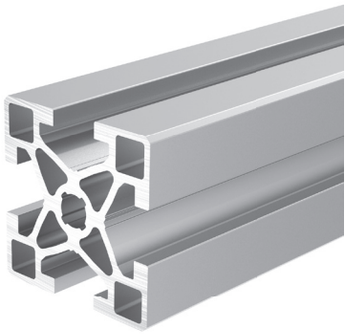

Application
- Machine frames
- Robot frame structures
- Workstations
- Machine guardings
- Enclosures
- Shelves, racks, trolleys (MRO equipment)
- etc.

Technical Data
Material: EN AW-6063-T66 clear anodized aluminum

Section modulus	$W_x = W_y$:	8.0 cm³
Geometrical moment of inertia:		
against x + y	$I_x = I_y$:	20.0 cm⁴
against torsion	I_t:	4.8 cm⁴
Cross sectional area	A:	857.5 mm²

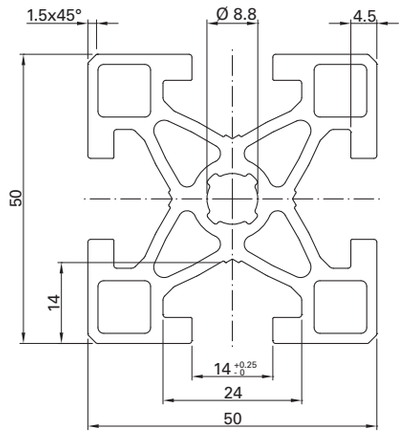

Tolerances and Deflection
see pages 196 to 197

Order Code

Description	Order Code[1] Length	Weight/Meter
Extrusion, cut to length, M10 tapped on both ends, 50 mm deep	PIL 5050 SNN ____	2.350 kg
Extrusion, stock length: 6050 mm (usable length 6000 mm)	PIL 5050 NNN 6050	2.350 kg
Extrusions, 64 units, stock length 6050 mm (usable length 6000 mm)	PIL 5050 PAC 0064	2.350 kg

PIL 5010 Extrusion 50x100

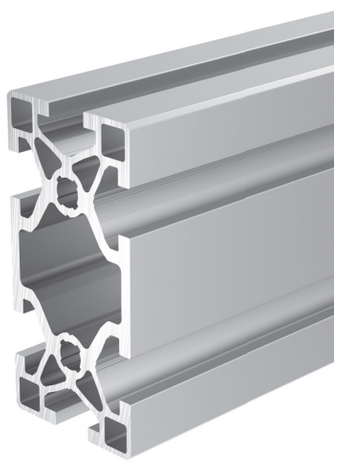

Application
- Machine frames
- Robot frame structures
- Workstations
- Base support for Linear Motion Units & gantries
- Machine guardings
- Enclosures
- Shelves, racks, trolleys (MRO equipment)
- etc.

Technical Data
Material: EN AW-6063-T66 clear anodized aluminum

Section modulus	W_x:	29.7 cm³
Section modulus	W_y:	16.6 cm³
Geometrical moment of inertia:		
against x	I_x:	148.5 cm⁴
against y	I_y:	41.4 cm⁴
against torsion	I_t:	37.0 cm⁴
Cross sectional area	A:	1559.3 mm²

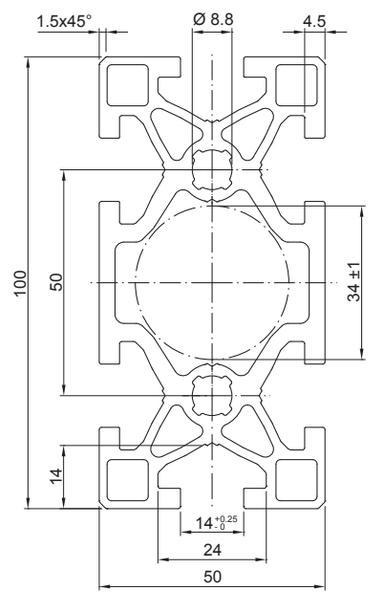

Tolerances and Deflection
see pages 196 to 197

Order Code

Description	Order Code[1] Length	Weight/Meter
Extrusion, cut to length, M10 tapped on both ends, 50 mm deep	PIL 5010 SNN ____	4.290 kg
Extrusion, stock length: 6050 mm (usable length 6000 mm)	PIL 5010 NNN 6050	4.290 kg
Extrusions, 32 units, stock length 6050 mm (usable length 6000 mm)	PIL 5010 PAC 0032	4.290 kg

1) Please complete the order code by adding the desired length.
Drawing dimensions in mm

PIL 5020 Extrusion 50x200

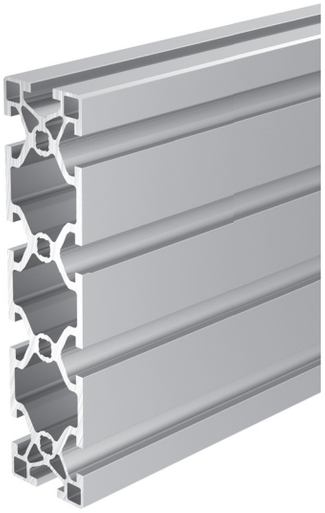

Application
- Heavy duty machine frames
- Robot frame structures
- Workstations
- Base support for Linear Motion Units & gantries
- Machine guardings
- Enclosures
- Shelves, racks, trolleys (MRO equipment)
- etc.

Technical Data
Material: EN AW-6063-T66 clear anodized aluminum

Section modulus	W_x:	107.8 cm^3
Section modulus	W_y:	33.6 cm^3
Geometrical moment of inertia:		
against x	I_x:	1077.8 cm^4
against y	I_y:	84.1 cm^4
against torsion	I_t:	107.0 cm^4
Cross sectional area	A:	2962.8 mm^2

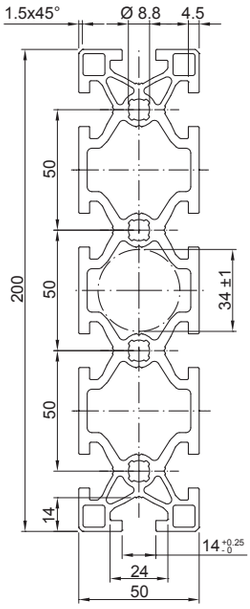

Tolerances and Deflection
see pages 196 to 197

Order Code

Description	Order Code[1] Length	Weight/Meter
Extrusion, cut to length, M10 tapped on both ends, 50 mm deep	PIL 5020 SNN ____	8.150 kg
Extrusion, stock length: 6050 mm (usable length 6000 mm)	PIL 5020 NNN 6050	8.150 kg
Extrusions, 16 units, stock length 6050 mm (usable length 6000 mm)	PIL 5020 PAC 0016	8.150 kg

1) Please complete the order code by adding the desired length.
Drawing dimensions in mm

PIL 1010 Extrusion 100x100

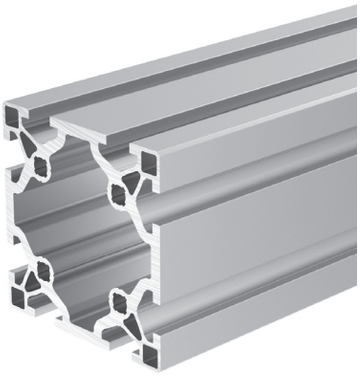

Application
- Heavy duty machine frames
- Robot frame structures
- Workstations
- Base support for Linear Motion Units & gantries
- Machine guardings
- Enclosures
- Shelves, racks, trolleys (MRO equipment)
- etc.

Technical Data
Material: EN AW-6063-T66 clear anodized aluminum

Section modulus	$W_x = W_y$:	61.1 cm³
Geometrical moment of inertia:		
against x + y	$I_x = I_y$:	305.6 cm⁴
against torsion	I_t:	256.0 cm⁴
Cross sectional area	A:	2714.4 mm²

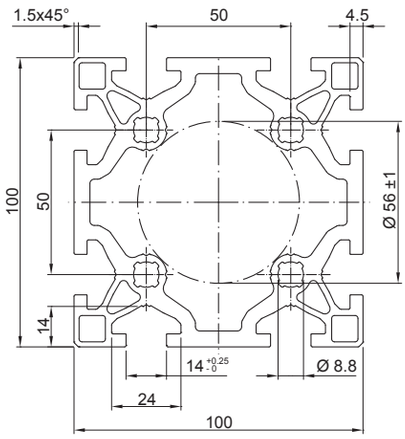

Tolerances and Deflection
see pages 196 to 197

Order Code

Description	Order Code[1] Length	Weight/Meter
Extrusion, cut to length, M10 tapped on both ends, 50 mm deep	PIL 1010 SNN ____	7.480 kg
Extrusion, stock length: 6050 mm (usable length 6000 mm)	PIL 1010 NNN 6050	7.480 kg
Extrusions, 16 units, stock length 6050 mm (usable length 6000 mm)	PIL 1010 PAC 0016	7.480 kg

PIL 1020 Extrusion 100x200

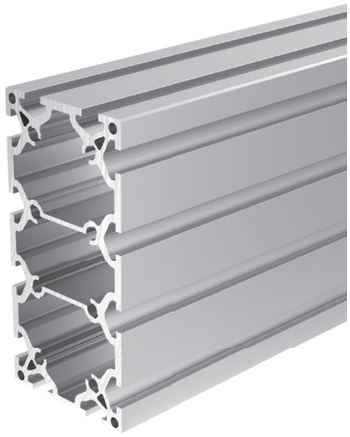

Application
- Heavy duty machine frames
- Robot frame structures
- Workstations
- Base support for Linear Motion Units & gantries
- Machine guardings
- Machine enclosures
- Shelves, racks, trolleys (MRO equipment)
- etc.

Technical Data
Material: EN AW-6063-T66 clear anodized aluminum

Section modulus	W_x:	220.2 cm³
Section modulus	W_y:	132.9 cm³
Geometrical moment of inertia:		
against x	I_x:	2202.2 cm⁴
against y	I_y:	664.4 cm⁴
against torsion	I_t:	794.0 cm⁴
Cross sectional area	A:	5128.7 mm²

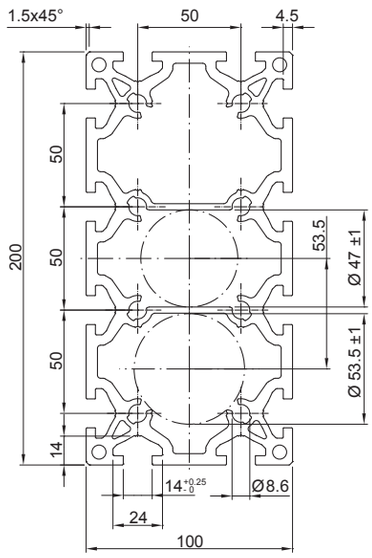

Tolerances and Deflection
see pages 196 to 197

Order Code

Description	Order Code[1] Length	Weight/Meter
Extrusion, cut to length, M10 tapped on both ends, 50 mm deep	PIL 1020 SNN ____	13.700 kg
Extrusion, stock length: 6050 mm (usable length 6000 mm)	PIL 1020 NNN 6050	13.700 kg
Extrusions, 8 units, stock length 6050 mm (usable length 6000 mm)	PIL 1020 PAC 0008	13.700 kg

1) Please complete the order code by adding the desired length.
Drawing dimensions in mm

PIL 2520 Extrusion 25x200

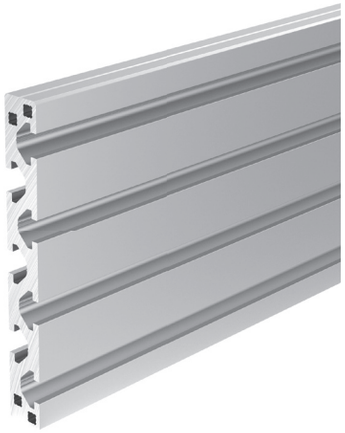

Application
- Carriage plates for Linear Motion Units
- Workstations
- Shelves, racks, trolleys (MRO equipment)
- etc.

Technical Data
Material: EN AW-6063-T66 clear anodized aluminum

Section modulus	W_x:	102.8 cm^3
Section modulus	W_y:	14.1 cm^3
Geometrical moment of inertia:		
against x	I_x:	1027.9 cm^4
against y	I_y:	17.6 cm^4
against torsion	I_t:	9.8 cm^4
Cross sectional area	A:	2891.7 mm^2

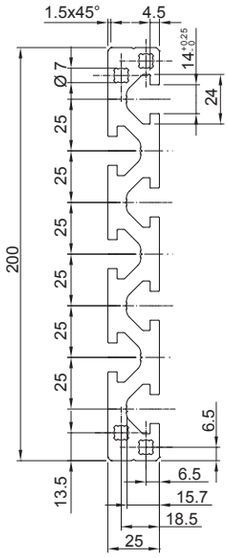

Tolerances and Deflection
see pages 196 to 197

Order Code

Description	Order Code[1] Length	Weight/Meter
Extrusion, cut to length, M8 tapped on both ends, 15 mm deep	PIL 2520 SNN ____	7.900 kg
Extrusion, stock length: 6050 mm (usable length 6000 mm)	PIL 2520 NNN 6050	7.900 kg

1) Please complete the order code by adding the desired length.
Drawing dimensions in mm

FAS 1641 Fastener 16x40

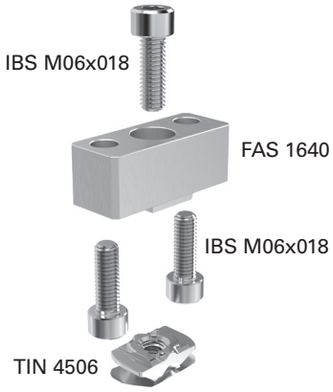

Application
90° fastener for extrusion PIL 1640

Technical Data
Material: clear anodized aluminum, galvanized steel

Tightening torque
IBS M06x018 = 10 Nm

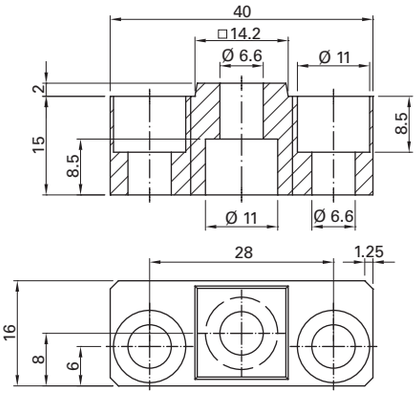

Order Code

Description	Scope of Delivery FAS 1640	TIN 4506	IBS M06x018	Order Code	Weight
Fastener Kit, 16x40	1	1	3	FAS 1641	0.045 kg

FAS 404_ Fastener 40x40

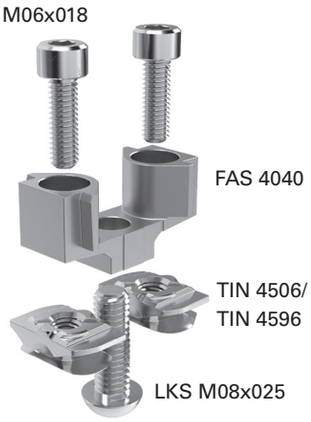

Transfer resistance per conductive connection: 0.4 mΩ

Application
90° fastener on 40 mm series for extrusion PIL 4040 and PIL 4080 transverse

Technical Data
Material: galvanized GD-Zn, galvanized steel

Load index
See page 186

Tightening torque
IBS M06x018 = 10 Nm
LKS M08x025 = 12 Nm

Optional
40x40 fastener Kit for conductive structures

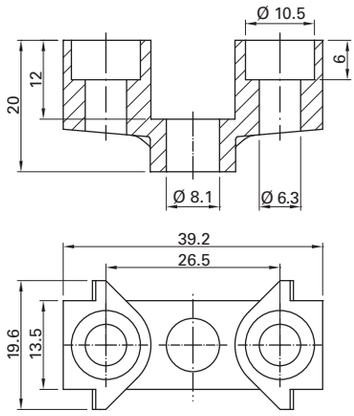

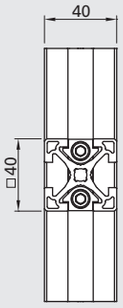

1 unit
FAS 4041 or
FAS 4043
conductive

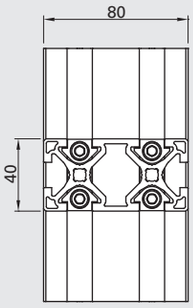

2 units
FAS 4041 or
FAS 4043
conductive

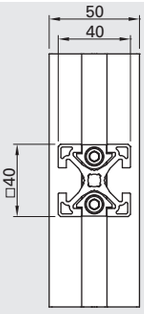

1 unit
FAS 4041 or
FAS 4043
conductive

Order Code

Description	Scope of Delivery FAS 4040	TIN 4506	TIN 4596	IBS M06x018	LKS M08x025	Order Code	Weight
Fastener Kit, 40x40	1	2	-	2	1	FAS 4041[1]	0.068 kg
Fastener Kit, 40x40	1	2	-	2	1	FAS 4041CP[2]	0.068 kg
Fastener Kit, 40x40, conductive	1	-	2	2	1	FAS 4043[1]	0.068 kg
Fastener Kit, 40x40, conductive	1	-	2	2	1	FAS 4043CP[2]	0.068 kg

FAS 408_ Fastener 40x80

Transfer resistance per conductive connection: 0.4 mΩ

Application
90° fastener on 40 mm series for extrusion
- PIL 4080, longitudinal
- PIL 8080

Technical Data
Material: galvanized GD-Zn, galvanized steel

Load index
See page 186

Tightening torque
IBS M06x018 = 10 Nm
LKS M08x025 = 12 Nm

Optional
40x80 fastener Kit for conductive structures

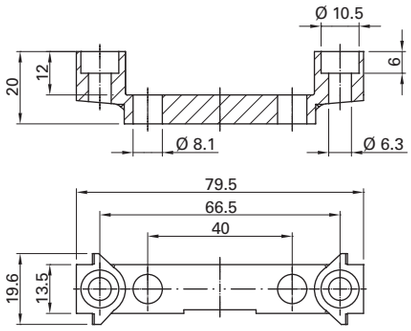

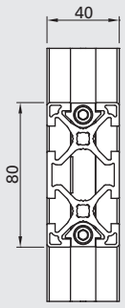

1 unit
FAS 4081 or
FAS 4083 conductive

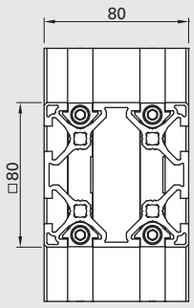

2 units
FAS 4081 or
FAS 4083 conductive

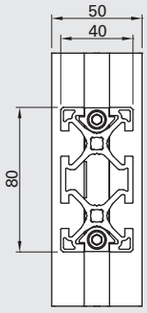

1 unit
FAS 4081 or
FAS 4083 conductive

Order Code

	Scope of Delivery					Order Code	
Description	FAS 4080	TIN 4506	TIN 4596	IBS M06x018	LKS M08x025		Weight
Fastener Kit, 40x80	1	2	-	2	2	FAS 4081[1]	0.103 kg
Fastener Kit, 40x80	1	2	-	2	2	FAS 4081CP[2]	0.103 kg
Fastener Kit, 40x80, conductive	1	-	2	2	2	FAS 4083[1]	0.103 kg
Fastener Kit, 40x80, conductive	1	-	2	2	2	FAS 4083CP[2]	0.103 kg

1) Packaged in Kit
2) Packaged by type, available for an order quantity of 100 or more
Drawing dimensions in mm

FAS 4049 Surface Fastener 40x40

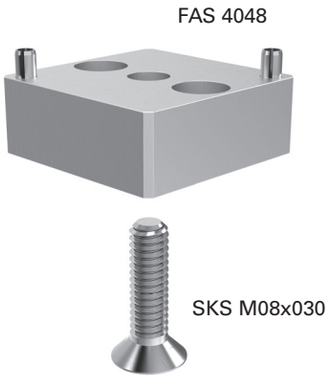

Application
Used for connections to non-Robotunits surfaces on 40 mm series for extrusion PIL 4040

Technical Data
Material: clear anodized aluminum, galvanized steel

Tightening torque
SKS M08x030 = 15 Nm

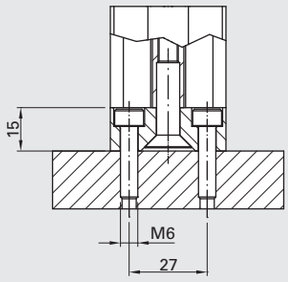

e.g. for attaching to steel plates

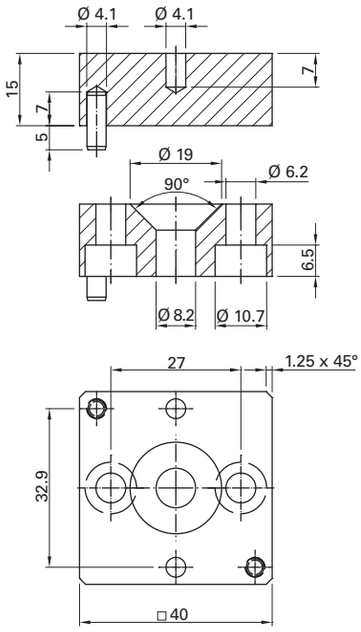

Order Code

Description	Scope of Delivery FAS 4048	Scope of Delivery SKS M08x030	Order Code	Weight
Surface Fastener Kit, 40x40	1	1	FAS 4049	0.070 kg

FAS 4051 End-to-End Fastener 40x40

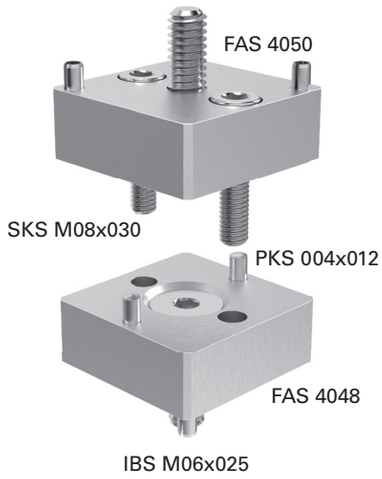

Application
Used for end-to-end connections of 40 mm series for extrusion PIL 4040

Technical Data
Material: clear anodized aluminum, galvanized steel

Tightening torque
SKS M08x030 = 15 Nm
IBS M06x025 = 10 Nm

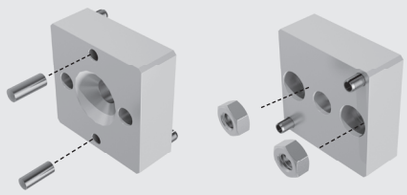

Drive in grooved pin

Press in nut

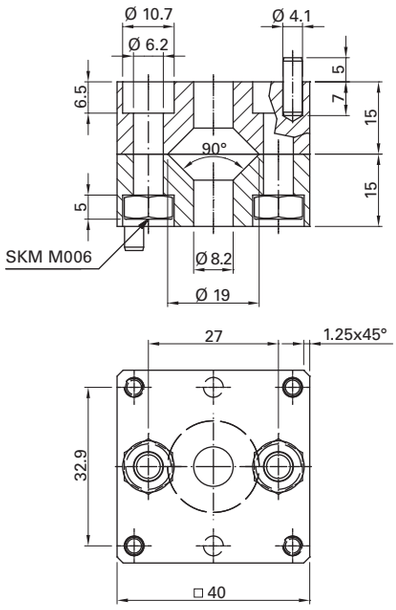

Order Code

Description	Scope of Delivery FAS 4048	FAS 4050	SKS M08x030	IBS M06x025	PKS 004x012	Order Code	Weight
End-to-End Fastener Kit, 40x40	1	1	2	2	2	FAS 4051	0.160 kg

GUS 4541 Angle Fastener 45°

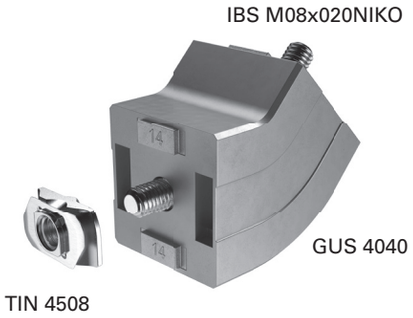

Application
For rigid 45° bracing, e.g.:
- Guardings
- Frames

Technical Data
Material: zinc diecast or galvanized steel

Tightening torque
IBS M08X025 = 26 Nm
IBS M08x020NIKO = 20 Nm

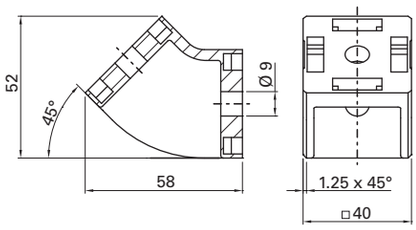

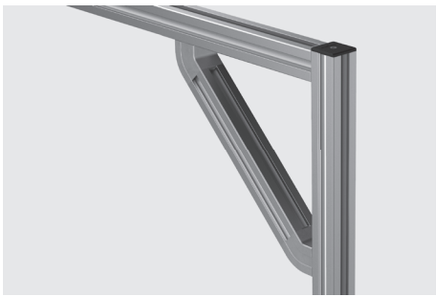

Order Code

Description	Scope of Delivery: GUS 4540	TIN 4508	IBS M08x025	IBS M08x020NIKO	BLS M008	Order Code	Weight
Angle Fastener 45° Kit	1	1	1	1	2	GUS 4541	0,211 kg

GUS 4_41 Elbow Joint 40

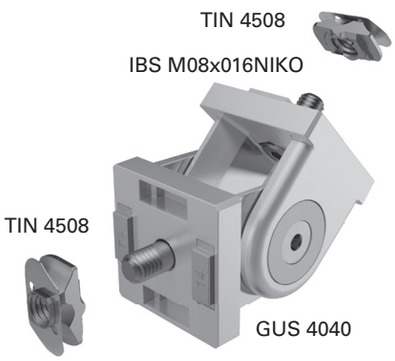

Application
For variable angle connections, e.g.:
- Guardings
- Frames
- Swing arms

Technical Data
Material: zinc diecast or galvanized steel
Pivoting range: +/- 90°

Tightening torque
IBS M08x016NIKO = 20 Nm
Clamp screw = 8 Nm

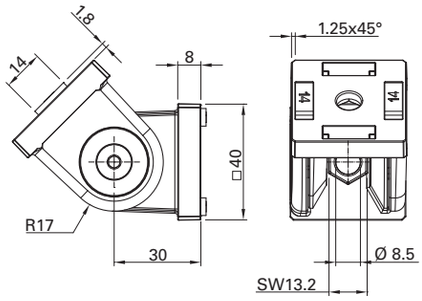

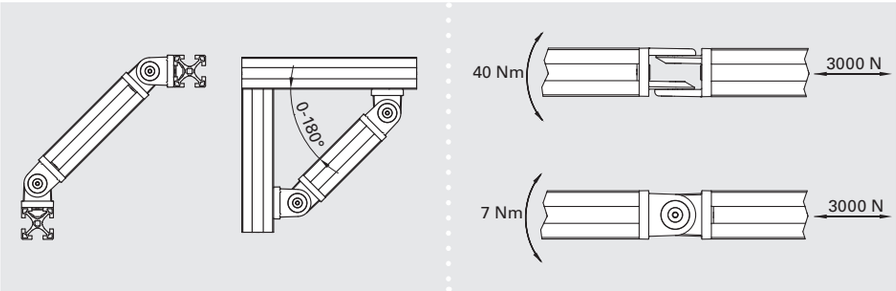

Order Code

Description	Scope of Delivery: GUS 4040	GUS 4140	TIN 4508	IBS M08x016NIKO	Order Code	Weight
Elbow Joint 40 Kit	1	-	2	2	GUS 4041	0.135 kg
Elbow Joint 40 Kit with Clamping Lever	-	1	2	2	GUS 4141	0.205 kg

Drawing dimensions in mm

FAS 505_ Fastener 50x50

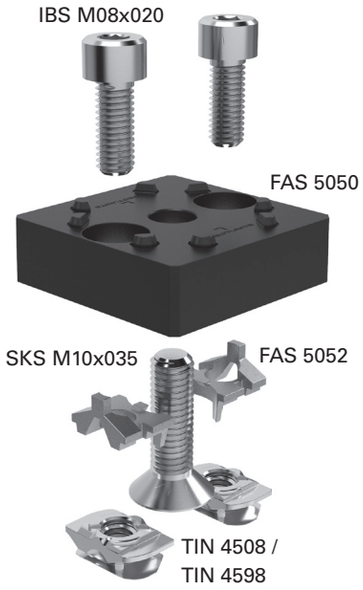

Application
Used for 90° connections of heavy-duty structures in the 50 mm series for extrusions:

- PIL 5050
- PIL 5010
- PIL 5020

Technical Data
Material: GD-Zn black KTL coated, galvanized steel

Load index
See page 186

Tightening torque
IBS M08x020 = 26 Nm
SKS M10x035 = 40 Nm

Transfer resistance per conductive connection: 0.4 mΩ

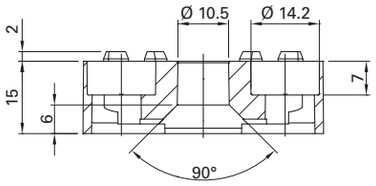

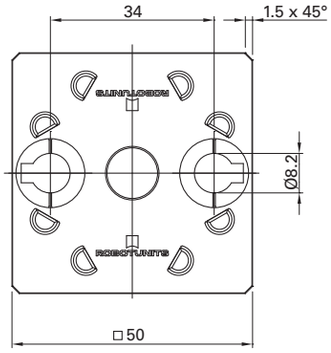

Assembly

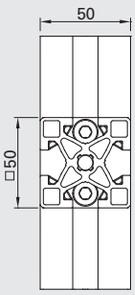

1 units FAS 5051 or FAS 5053 conductive

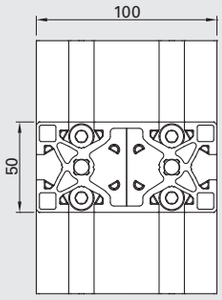

2 units FAS 5051 or FAS 5053 conductive

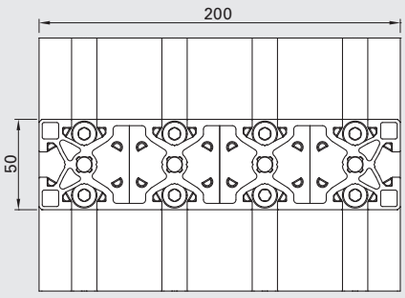

4 units FAS 5051 or FAS 5053 conductive

Order Code

	Scope of Delivery						Order Code	
Description	FAS 5050	FAS 5052	TIN 4508	TIN 4598	IBS M08x020	SKS M10x035		Weight
Fastener Kit, 50x50	1	2	2	-	2	1	FAS 5051[1]	0.223 kg
Fastener Kit, 50x50	1	2	2	-	2	1	FAS 5051CP[2]	0.223 kg
Fastener Kit, 50x50, conductive	1	2	-	2	2	1	FAS 5053[1]	0.223 kg
Fastener Kit, 50x50, conductive	1	2	-	2	2	1	FAS 5053CP[2]	0.223 kg
Fastener, 50x50	100	-	-	-	-	-	FAS 5050 PAC 0100	14.400 kg

1) Packaged in Kit
2) Packaged by type, available for an order quantity of 100 or more
Drawing dimensions in mm

FAS 505_ Single-Sided Fastener 50x50

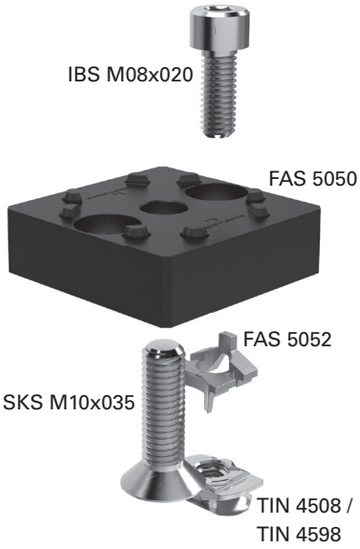

Application
Used for 90° connections of heavy-duty structures in the 50 mm series for extrusions:
- PIL 5010
- PIL 1010
- PIL 5020

Technical Data
Material: GD-Zn black KTL coated, galvanized steel

Load index
See page 186

Tightening torque
IBS M08x020 = 26 Nm
SKS M10x035 = 40 Nm

Transfer resistance per conductive connection: 0.4 mΩ

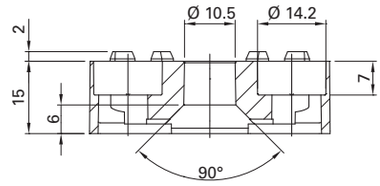

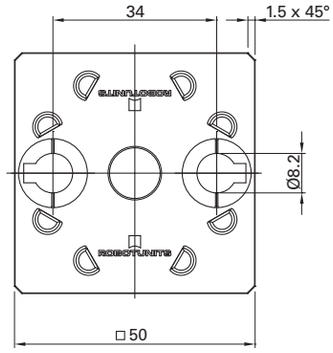

Assembly

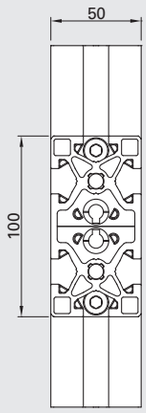

2 units FAS 5055 single-sided or FAS 5057 single-sided, conductive

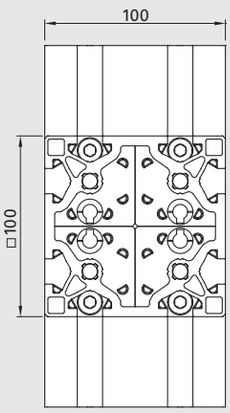

4 units FAS 5055 single-sided or FAS 5057 single-sided, conductive

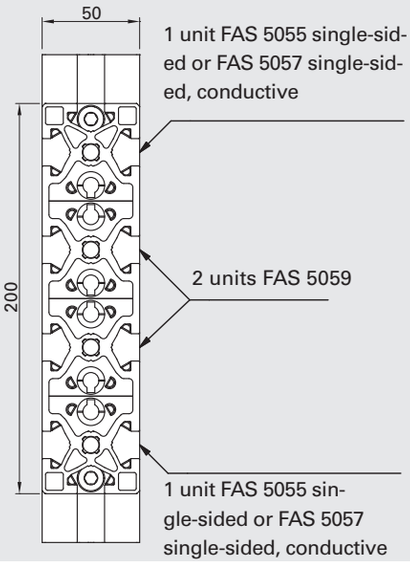

Order Code

Description	Scope of Delivery FAS 5050	FAS 5052	TIN 4508	TIN 4598	IBS M08x020	SKS M10x035	Order Code	Weight
Fastener Kit, 50x50, single-sided	1	1	1	-	1	1	FAS 5055[1]	0.185 kg
Fastener Kit, 50x50, single-sided	1	1	1	-	1	1	FAS 5055CP[2]	0.185 kg
Fastener Kit, 50x50, single-sided, cond.	1	1	-	1	1	1	FAS 5057[1]	0.185 kg
Fastener Kit, 50x50, single-sided, cond.	1	1	-	1	1	1	FAS 5057CP[2]	0.185 kg
Fastener, 50x50	100	-	-	-	-	-	FAS 5050 PAC 0100	14.400 kg

1) Packaged in Kit
2) Packaged by type, available for an order quantity of 100 or more
Drawing dimensions in mm

FAS 5059 Surface Fastener 50x50

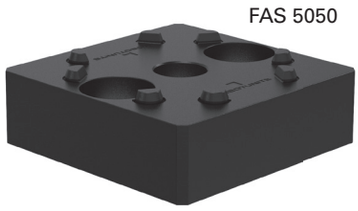

FAS 5050

SKS M10x035

Application
Used for connections to non-Robotunits surfaces. 90° connection for massive structures in the 50 mm series for extrusions

- PIL 5050
- PIL 5010
- PIL 1010
- PIL 5020

Technical Data
Material: GD-Zn black KTL coated, galvanized steel

Tightening torque
SKS M10x035 = 40 Nm

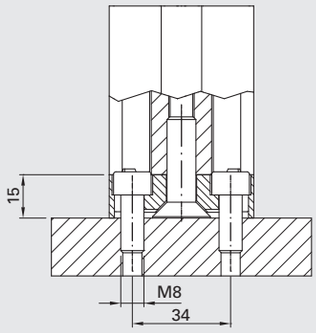

e.g. for attaching to steel plates

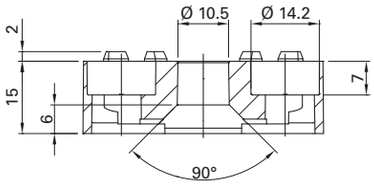

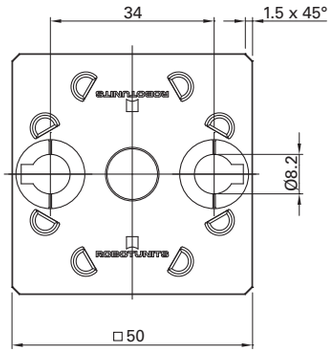

Order Code

	Scope of Delivery		Order Code	
Description	FAS 5050	SKS M10x035		Weight
Surface Fastener Kit, 50x50	1	1	FAS 5059	0.168 kg

Drawing dimensions in mm

FAS 5061 End-To-End Fastener 50x50

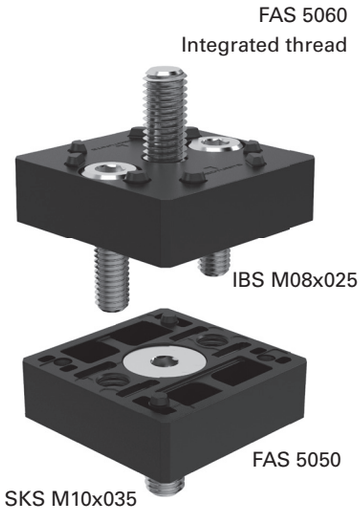

Application
Used for end-to-end connections of 50 mm series extrusions for
- PIL 5050
- PIL 5010
- PIL 1010
- PIL 5020

Technical Data
Material: GD-Zn black KTL coated, galvanized steel

Tightening torque
IBS M08x020 = 26 Nm
SKS M10x035 = 40 Nm

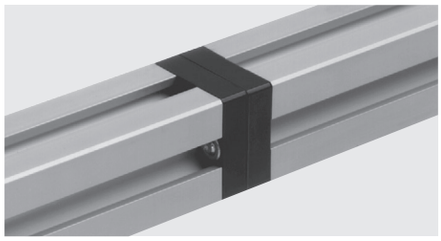

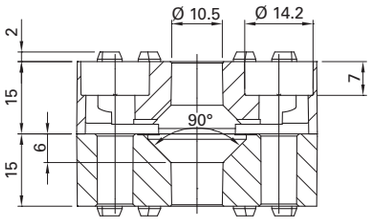

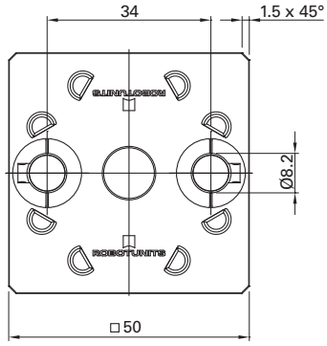

Order Code

Description	Scope of Delivery				Order Code	Weight
	FAS 5050	FAS 5060	IBS M08x025	SKS M10x035		
End-To-End Fastener Kit, 50x50	1	1	2	2	FAS 5061	0.374 kg

Drawing dimensions in mm

FAS 102_ Fastener 100x200

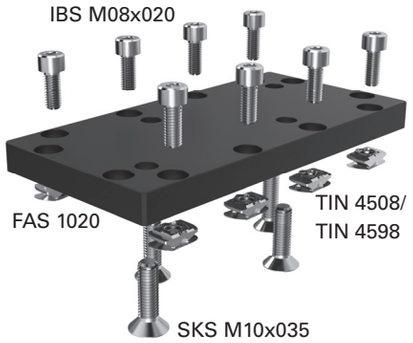

Application
Used for 90° connections of heavy duty structures of PIL 1020

Technical Data
Material: black anodized aluminum, galvanized steel

Tightening torque
IBS M08x020 = 26 Nm
SKS M10x035 = 40 Nm

Transfer resistance per conductive connection: 0.4 mΩ

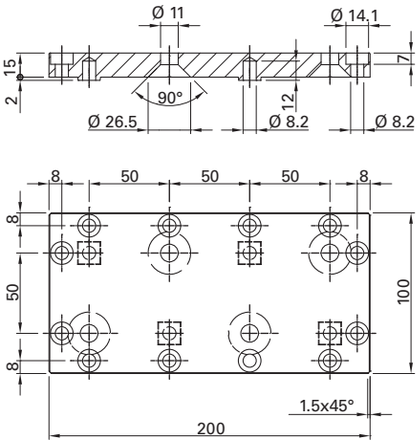

Cross Fastener

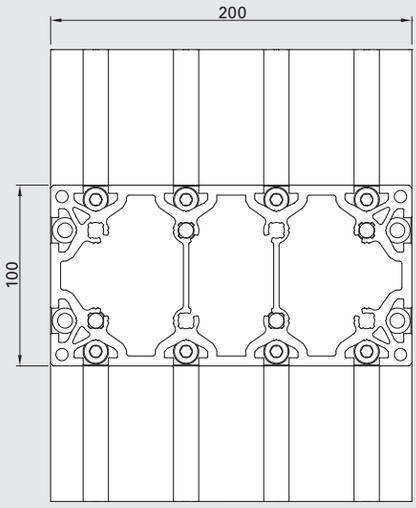

1 units FAS 1021 or FAS 1023 conductive

In-Line Fastener

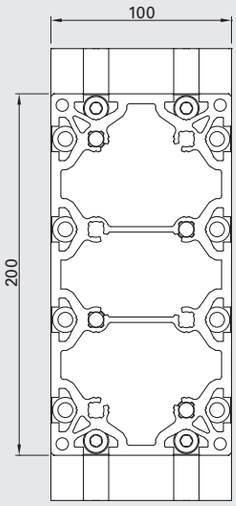

1 units FAS 1025 or FAS 1027 conductive

Order Code

	Scope of Delivery					Order Code	
Description	FAS 1020	TIN 4508	TIN 4598	IBS M08x020	SKS M10x035		Weight
Cross Fastener Kit, 100x200	1	8	-	8	4	FAS 1021	1.000 kg
Cross Fastener Kit, 100x200, cond.	1	-	8	8	4	FAS 1023	1.000 kg
In-Line Fastener Kit, 100x200	1	4	-	4	4	FAS 1025	0.920 kg
In-Line Fastener Kit, 100x200, cond.	1	-	4	4	4	FAS 1027	0.920 kg

Drawing dimensions in mm

GUS 450_ Corner Bracket 40/50

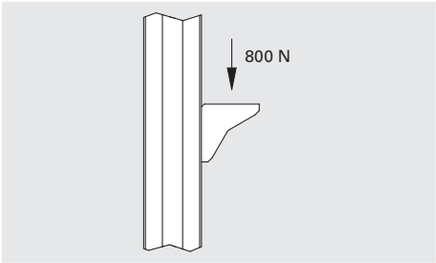

Application
Used for 90° connections and as strengthening element in combination with Robotunits fasteners, for both 40 mm and 50 mm series extrusions, e.g.:
- 40/40 series combination
- 50/50 series combination
- 40/50 series combination

Connections to non-Robotunits extrusions and surfaces, e.g.:
- Mounting of table tops
- Fastening to non-Robotunits extrusions
- Fastening to walls

Technical Data
Material: GD-Zn black KTL coated, galvanized steel

Tightening torque
IBS M08x020NIKO = 20 Nm

By turning the centering insert (GUS 4502), the angle bracket can be used in either the 40 mm or the 50 mm series.

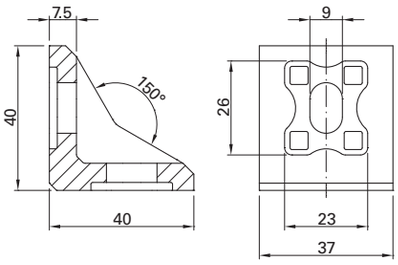

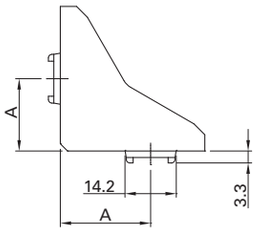

A in 40 mm series = 20
A in 50 mm series = 25

Applications

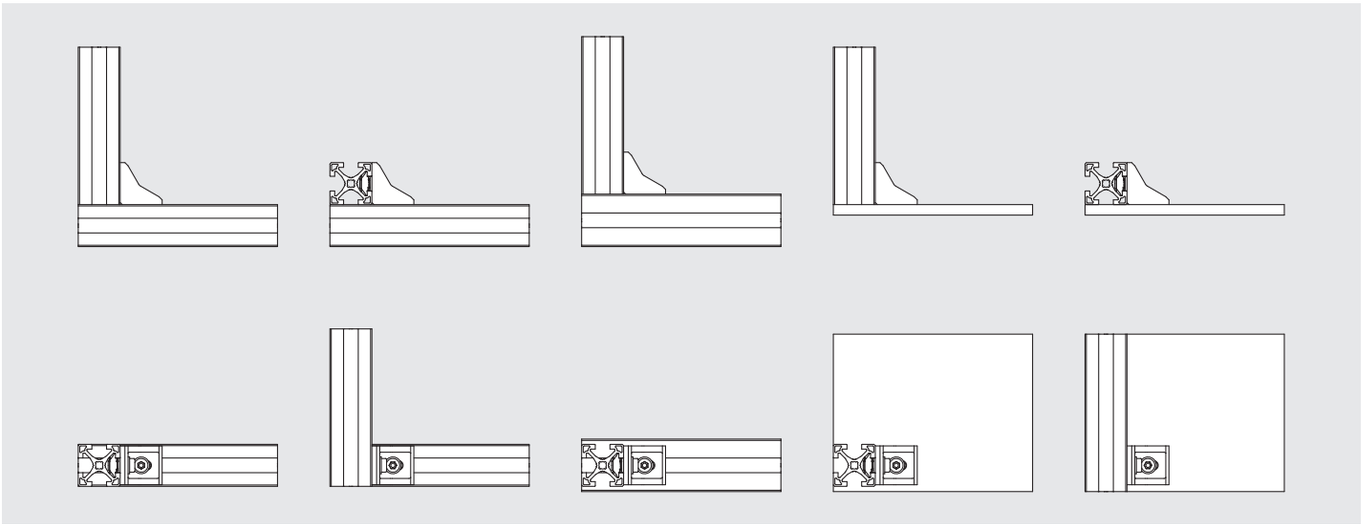

Order Code

Description	Scope of Delivery GUS 4500	GUS 4502	TIN 4508	IBS M08x020NIKO	BLS M008	Order Code	Weight
Corner Bracket 40/50 Kit	1	2	2	2	2	GUS 4501[1]	0.180 kg
Corner Bracket 40/50 Kit	1	2	2	2	2	GUS 4501CP[2]	0.180 kg
Corner Bracket 40/50	80	-	-	-	-	GUS 4500 PAC 0080	9.920 kg

1) Packaged in Kit
2) Packaged by type, available for an order quantity of 100 or more
Drawing dimensions in mm

GUS 4651 Fixing Bracket 35x25

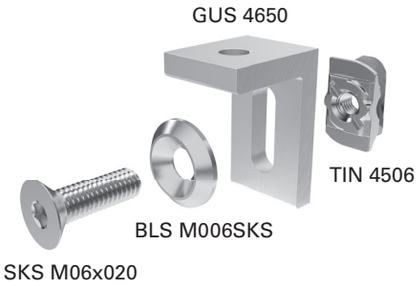

Application
Used for 90° connections and as strengthening element in combination with Robotunits extrusion technology with non-Robotunits components. Particularly suitable for fixing table plates and similar surface elements

Technical Data
Material: clear anodized aluminum galvanized steel

Tightening torque
SKS M06x020 = 9 Nm

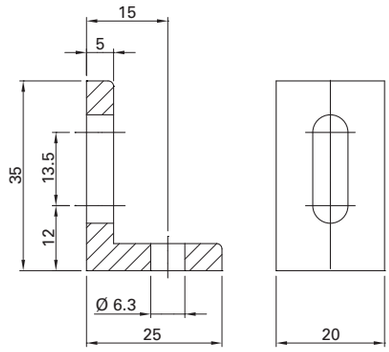

Applications

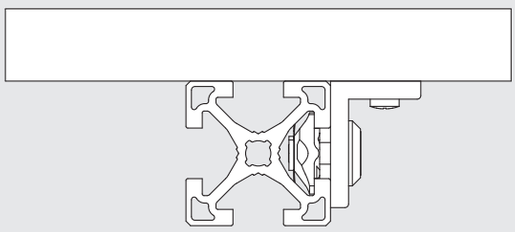

Table plate fastening

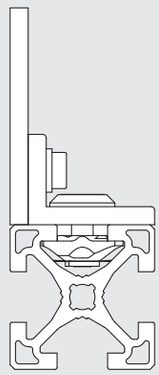

Surface element fastening

Order Code

	Scope of Delivery				Order Code	
Description	GUS 4650	TIN 4506	SKS M06x020	BLS M006SKS		Weight
Fixing Bracket, 35x25 Kit	1	1	1	1	GUS 4651	0.030 kg

Drawing dimensions in mm

GUS 100_ Corner Bracket 100

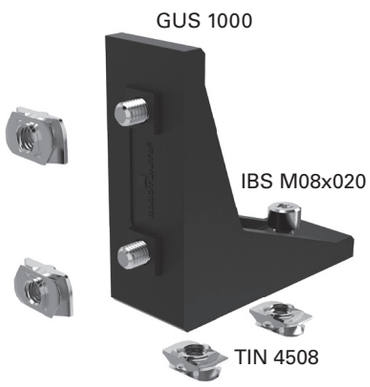

Application
Used for 90° connections and as strengthening element in combination with Robotunits fasteners. The GUS 1000 can also be used with 40 mm series extrusions parallel to T-slot centerline.

Technical Data
Material: GD-Zn black KTL coated, galvanized steel

Tightening torque
IBS M08x020 = 26 Nm

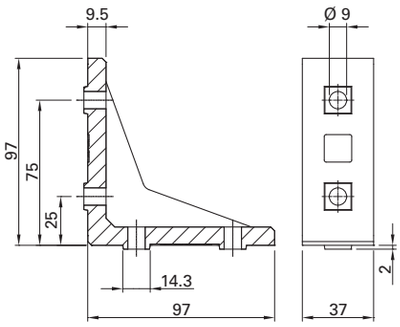

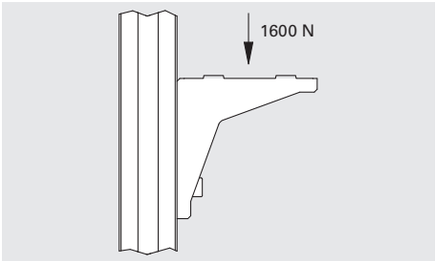

Order Code

Description	Scope of Delivery GUS 1000	TIN 4508	IBS M08x020	Order Code	Weight
Corner Bracket 100 Kit	1	4	4	GUS 1001[1]	0.615 kg
Corner Bracket 100 Kit	1	4	4	GUS 1001CP[2]	0.615 kg
Corner Bracket 100	16	-	-	GUS 1000 PAC 0016	9.500 kg

GUS 110_ Corner Bracket 100, one side centered

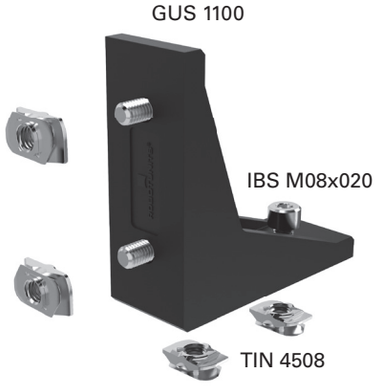

Application
Used for 90° connections and as strengthening element in combination with Robotunits fasteners and non-Robotunits extrusions and surfaces. The GUS 1100 can also be used with 40 mm series extrusions parallel to T-slot centerline.

Technical Data
Material: GD-Zn black KTL coated, galvanized steel

Tightening torque
IBS M08x020 = 26 Nm

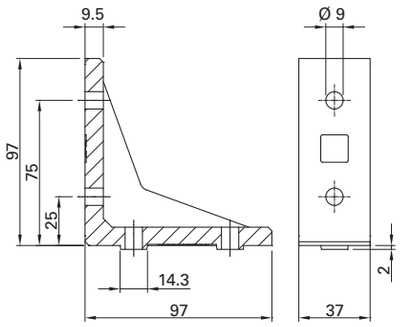

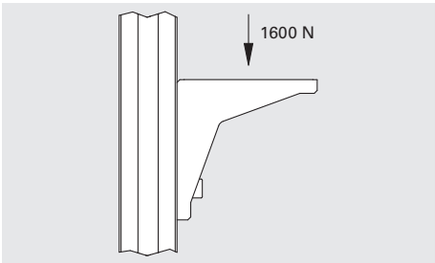

Order Code

Description	Scope of Delivery GUS 1100	TIN 4508	IBS M08x020	Order Code	Weight
Corner Bracket 100 Kit, one side centered	1	4	4	GUS 1101[1]	0.615 kg
Corner Bracket 100 Kit, one side centered	1	4	4	GUS 1101CP[2]	0.615 kg
Corner Bracket 100, one side centered	16	-	-	GUS 1100 PAC 0016	9.500 kg

TIN 45__ Drop-in Nut

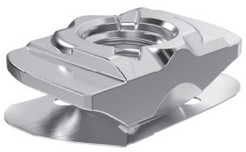

Application
Used for 40 mm and 50 mm series extrusions
- Self-centering
- Slip protection (leaf springs)
- Anti-twist safeguard

Technical Data
Material: galvanized steel

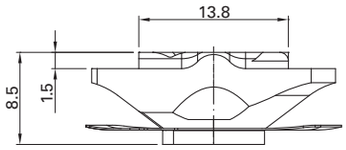

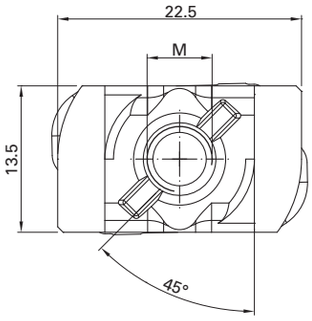

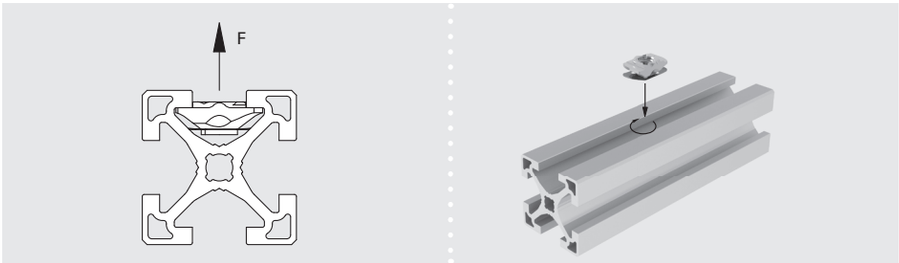

Order Code

Description	F[1]	Order Code	Weight
Drop-in Nut M4	1500 N	TIN 4504	0.010 kg
Drop-in Nut M4, conductive	1500 N	TIN 4594	0.010 kg
Drop-in Nut M5	3000 N	TIN 4505	0.010 kg
Drop-in Nut M5, conductive	3000 N	TIN 4595	0.010 kg
Drop-in Nut M6	4500 N	TIN 4506	0.010 kg
Drop-in Nut M6, conductive	4500 N	TIN 4596	0.010 kg
Drop-in Nut M8	6000 N	TIN 4508	0.010 kg
Drop-in Nut M8, conductive	6000 N	TIN 4598	0.010 kg

TIN 9990 Inserter

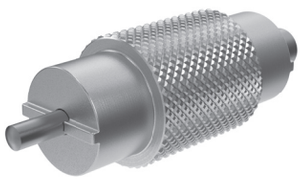

Application
Assembly tool for inserting Drop-in Nuts into T-slot.

Technical Data
Material: galvanized steel

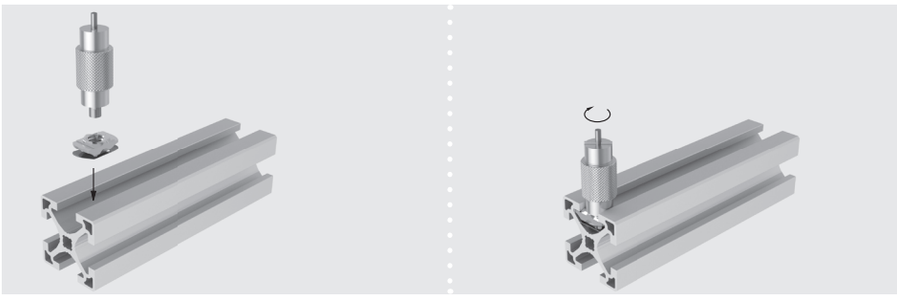

Order Code

Description	Order Code	Weight
Inserter	TIN 9990	0.045 kg

1) Pull-out values are based on screw quality 8.8

TIN 60__ T-Nut

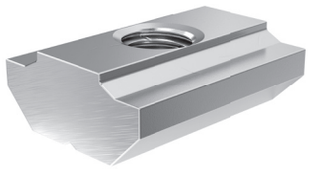

Application
For 40 mm series and 50 mm series extrusions
- Self-centering

Technical Data
Material: galvanized steel

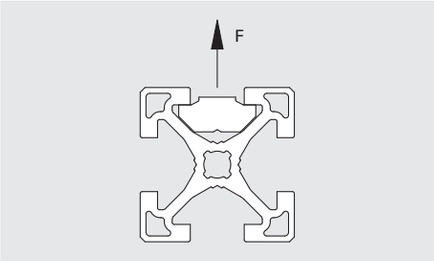

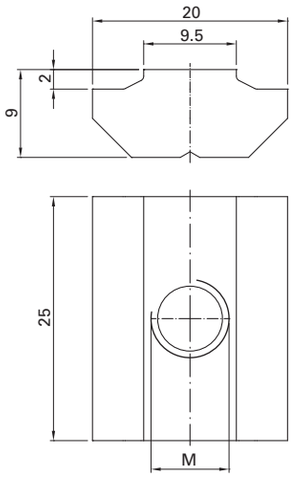

Order Code

Description	F[1]	Order Code	Weight
T-Nut M8	7500 N	TIN 6008	0.027 kg
T-Nut M10	7500 N	TIN 6010	0.025 kg

1) Pull-out values are based on screw quality 8.8
Drawing dimensions in mm

TIN _000 T-Nut Bar

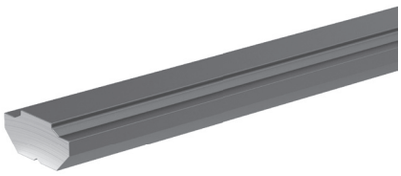

Application
Used for specific applications with 40 mm and 50 mm series extrusions

Technical Data
Material: untreated steel
Stock length: 1000 or 3030 mm

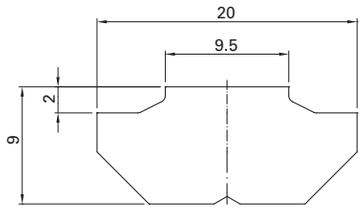

Order Code

Description	Order Code	Weight
T-Nut Bar, stock length: 1000 mm	TIN 1000	1.125 kg
T-Nut Bar, stock length: 3030 mm	TIN 3000	3.375 kg

TIN 0171 T-Nut In-Line Fastener

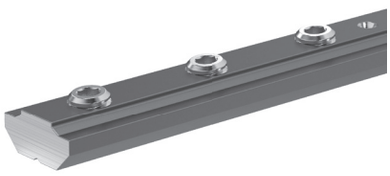

Application
Used for end-to-end connections of 40 mm and 50 mm series extrusions

Technical Data
Material: galvanized steel

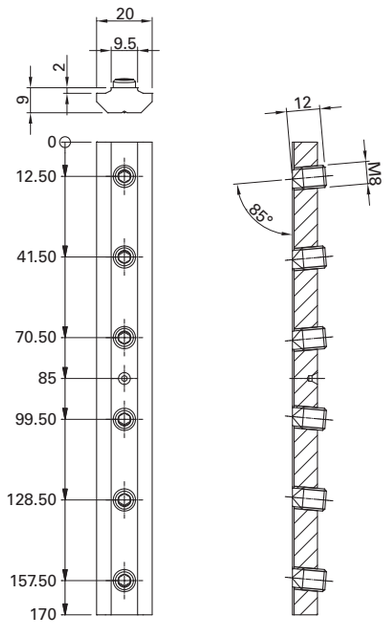

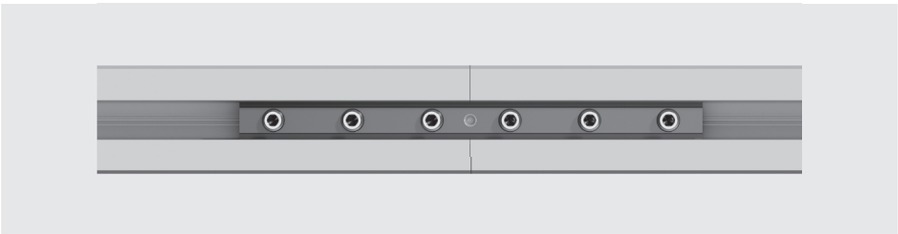

Order Code

Description	Scope of Delivery: Base Part	Scope of Delivery: GST M08x012 SPI	Order Code	Weight
T-Nut In-Line Fastener	1	6	TIN 0171	0.196 kg

Drawing dimensions in mm

TIN 4545 Miter Fastener

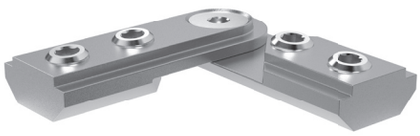

Application
Fasteners for extrusions with miter cuts

Technical Data
Material: galvanized steel

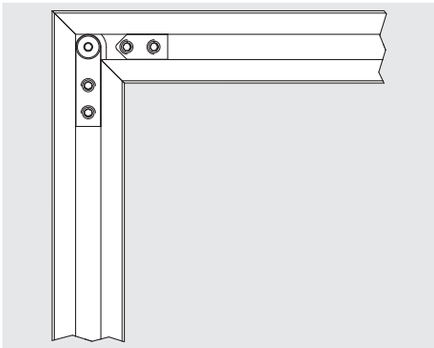

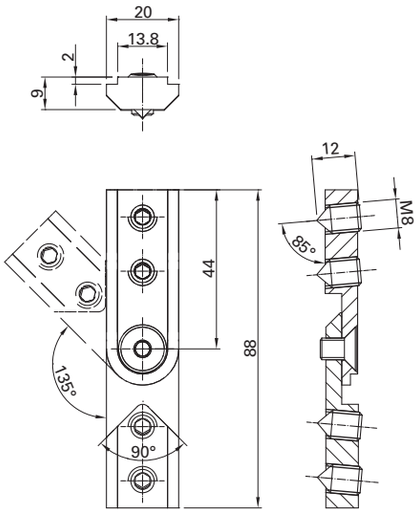

Order Code

	Scope of Delivery				Order Code	
Description	Base Part countersink	Base Part thread	GST M08x012 SPI	SKS M06x010		Weight
Miter Fastener	1	1	4	1	TIN 4545	0.098 kg

TIN _000 Special Fastener

Application
For mounting parts onto Robotunits extrusions where no holes are to be seen from the outside of the assembly

In contrast with all other Robotunits fasteners, this fastener requires drilling.

Technical Data
Material: galvanized steel, NBR

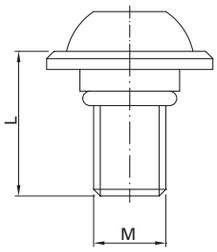

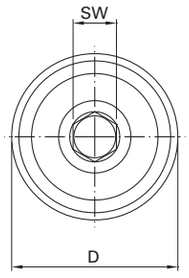

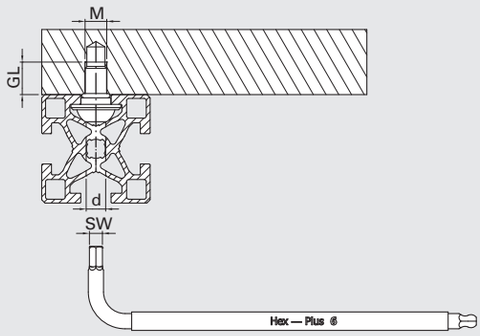

Order Code

							Order Code	
Description	GL	SW	M	d	D	L		Weight
Special Fastener 40	15	5	M8	7	20	20	TIN 4000	0.016 kg
Special Fastener 50	15	6	M10	9	23	20	TIN 5000	0.032 kg

EASILY CONSTRUCTED SAFETY FENCE SYSTEM

Safety standard requirements have never been as demanding as today. National and international standards have to be considered. Quickly changing production requirements and continuous upgrades and adaptations require a flexible and time-saving Safety Fence System.

Order completely pre-assembled components that are easily and quickly installed. Nothing is so simple and safe as the Safety Fence System from Robotunits.

Turn-key offer
- Included in the price and delivery: ready-to-insert, completely assembled elements (including safety fence foot and connectors between elements)
- modular safety fence system with flat and door panels
- standard widths from 518 mm to 1507 mm or special-width panels
- standard height 2200 mm or special height panels

Ready to install
- easy installation of fully assembled panels
- minimum installation time

One Mesh Clip, many functions
- impact rated up to 80 kg at 10 km/h
- small number of parts
- visually appealing design

High flexibility
- quick installation of all panels
- panels can be easily removed to gain access to machine area
- adjustable to any angle

Easy installation
- only one person required for setup
- only one Allen wrench size needed
- reusable components

Fully integrated Safety Fence System
- uniform slot size and shape
- completely compatible with entire Modular Automation System
- quick and easy attachment of accessories
- use of standard screws and standard panels

Save time, cut cost
- no additional design expenses
- simple panel selection
- efficient one-person installation
- simple adjustment and setup on-site
- just one order code for the complete safety fence panels
- easy attachment of accessories (safety switches, etc.)

Safety
- complete documentation
- meets European Machinery Safety Standards and the latest automotive industry specifications

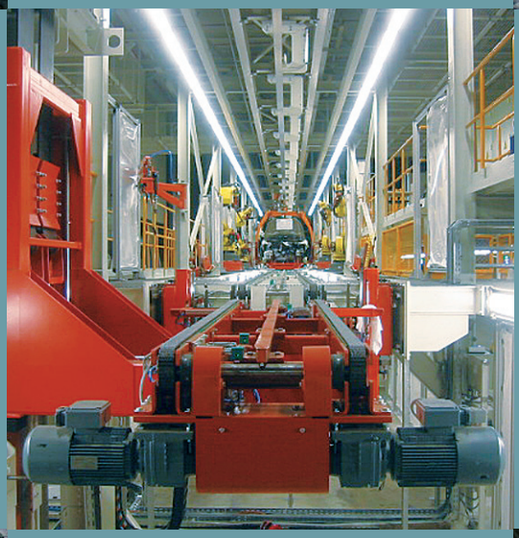

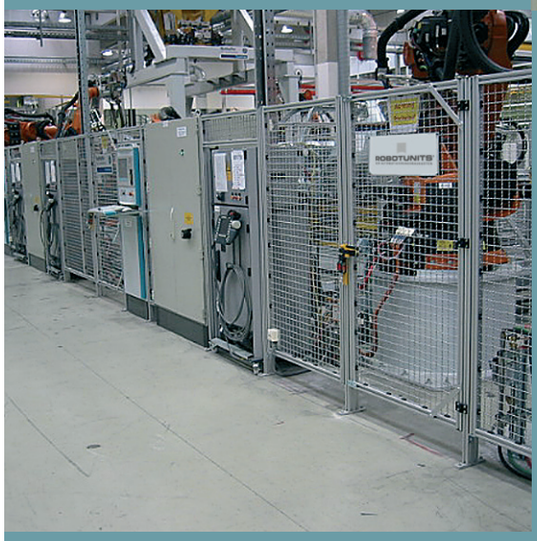

Easily constructed Safety Fence System

Basic System Page 96

Basic Panel SBE ____ P. 98

Basic Single Door SBS 1044 P. 100

Basic Double Door SBD 2083 P. 101

Basic Sliding Door SBF 0872 P. 102

Allround System Page 104

Allround Panel SAE ___ P. 106

Allround Post SAP 4180 P. 108

Allround Single Door SAS 1044 P. 109

Allround Double Door SAD 2083 P. 110

Allround Sliding Door SAF 0872 P. 111

Safety Fence Accessory Overview Page 136

Safety Distances for Safety Systems Page 199

Basic System

The Basic system is the “classic“ among Robotunits safety fence systems. Easy to use and low in price. Ideal for standard applications in machine design and in production automation.
The Basic system is capable of stopping up to 80 kg at 10 km/h.

How does the Basic system work?
With the Basic system, the Basic panels (B) or Basic doors (D) are lined up and then directly connected with one another using Safety Fence Fasteners.

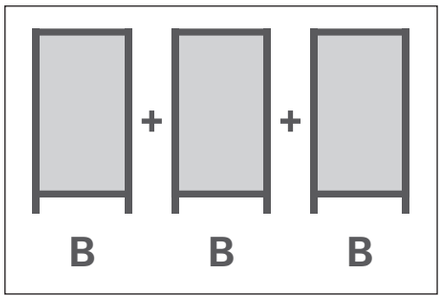

Basic System Overview

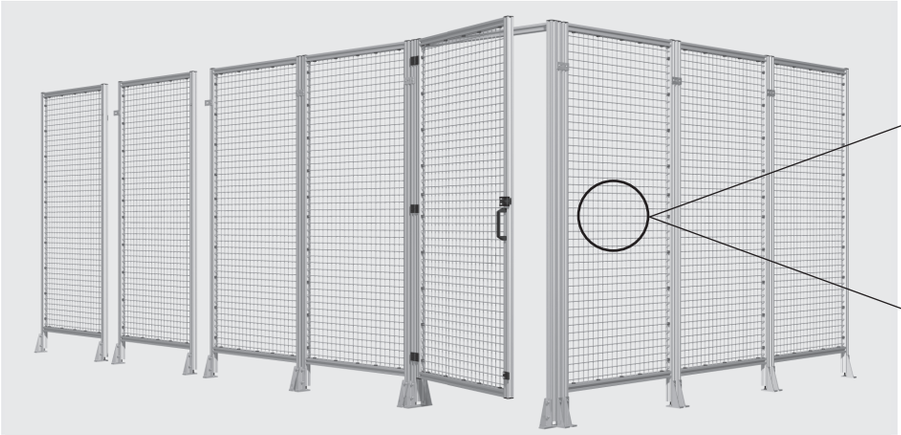

Panel Options

Weld Mesh with Weld Mesh Clip

Polycarbonate with Panel Profile

Basic Panel

Basic Doors

Single Door

Double Door

Sliding Door

Basic System Dimensions

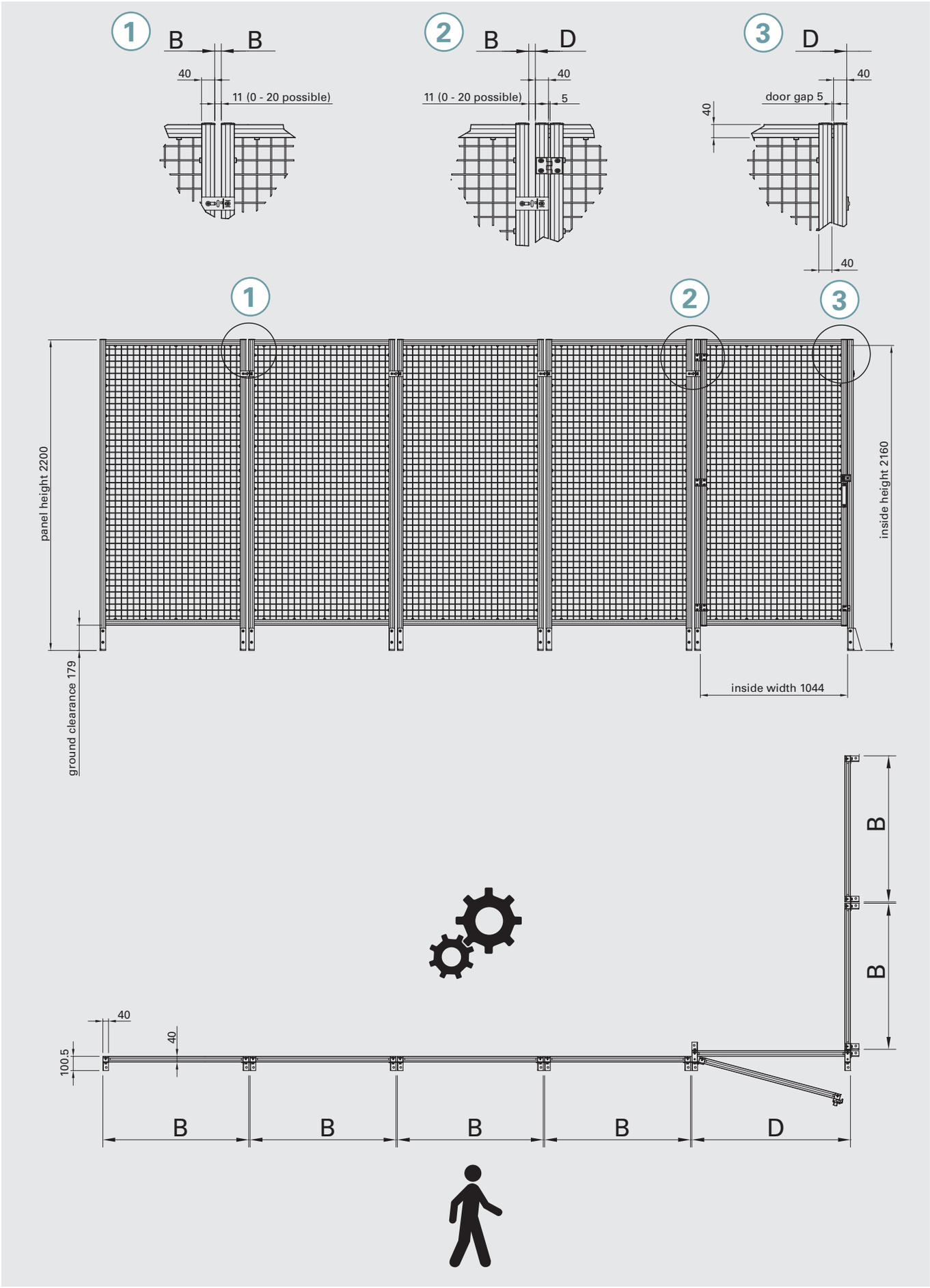

SBE ____ Basic Panel Standard Width

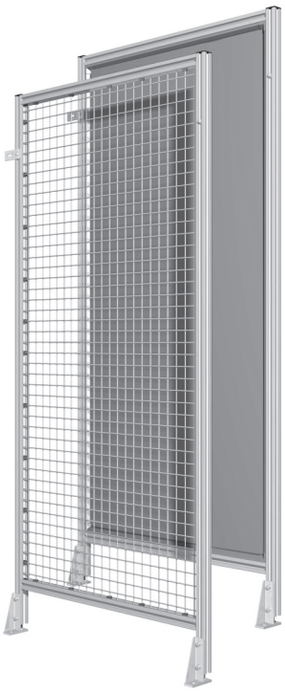

Application
For general safety fencing

Technical Data
Material: EN AW-6063-T66 clear anodized aluminum; galvanized steel, powder-coated, chrome silver steel; black ABS V0 composite; Weld Mesh or Polycarbonate; conductive Weld Mesh and frame; Safety Fence Floor Bracket height adjustable from - 20 / + 5 mm

Scope of Delivery
Completely pre-assembled, consisting of:
- 2 Post Extrusions 40 x 40 PIL 4140
- 2 Horizontal Extrusions 40 x 40 PIL 4140
- 4 Fasteners FAS 4043, conductive
- 1 Safety Fence Fastener TIN 4511
- 2 End Caps CAP 4041
- 2 Safety Fence Floor Brackets BAP 2051

Panel option according to the order code:
- Weld Mesh with Weld Mesh Clip and Safety Fence Mesh Retainer
- Polycarbonate with Panel Profile

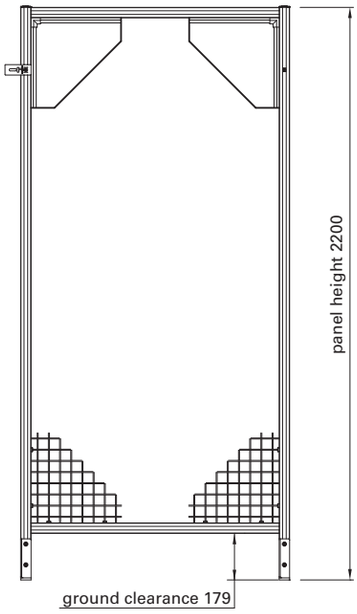

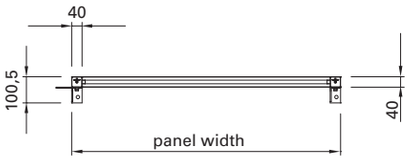

Panel Options:
Weld Mesh or
4 mm thick Polycarbonate

Design tip:
Standard widths offer an outstanding price/performance ratio and quick delivery.

Order Code

Description	Panel Width	Panel Option	Order Code	Weight
Basic Panel Standard Width	0518	Weld Mesh	SBE 0518 SNA 2200	11.797 kg
Basic Panel Standard Width	0776	Weld Mesh	SBE 0776 SNA 2200	14.610 kg
Basic Panel Standard Width	1034	Weld Mesh	SBE 1034 SNA 2200	17.425 kg
Basic Panel Standard Width	1507	Weld Mesh	SBE 1507 SNA 2200	22.584 kg
Basic Panel Standard Width	0518	Polycarbonate	SBE 0518 PNA 2200	12.993 kg
Basic Panel Standard Width	0776	Polycarbonate	SBE 0776 PNA 2200	16.120 kg
Basic Panel Standard Width	1034	Polycarbonate	SBE 1034 PNA 2200	19.246 kg
Basic Panel Standard Width	1507	Polycarbonate	SBE 1507 PNA 2200	24.977 kg

Drawing dimensions in mm

SBE ____ Basic Panel Special Width

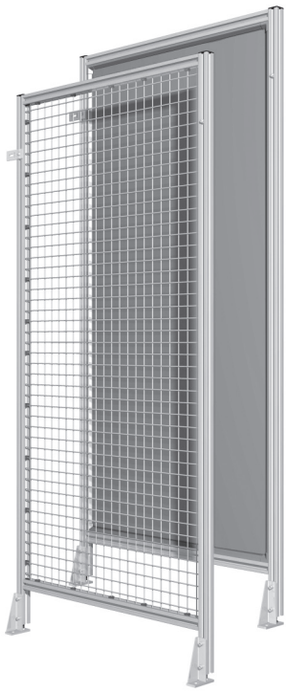

Application
For general safety fencing

Technical Data
Material: EN AW-6063-T66 clear anodized aluminum; galvanized steel, powder-coated, chrome silver steel; black ABS V0 composite; Weld Mesh or Polycarbonate; conductive Weld Mesh and frame; Safety Fence Floor Bracket height adjustable from - 20 / + 5 mm

Scope of Delivery
Completely pre-assembled, consisting of:
- 2 Post Extrusions 40 x 40 PIL 4140
- 2 Horizontal Extrusions 40 x 40 PIL 4140
- 4 Fasteners FAS 4043, conductive
- 1 Safety Fence Fastener TIN 4511
- 2 End Caps CAP 4041
- 2 Safety Fence Floor Brackets BAP 2051

Panel option according to the order code:
- Weld Mesh with Weld Mesh Clip and Safety Fence Mesh Retainer
- Polycarbonate with Panel Profile

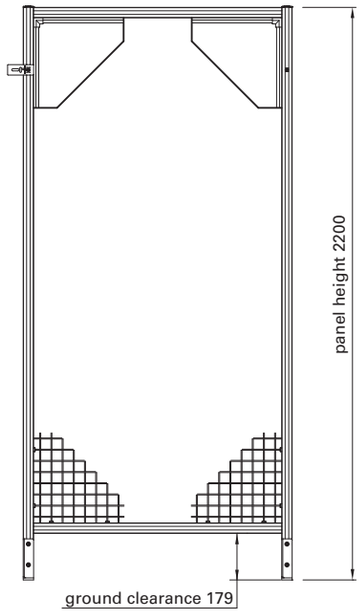

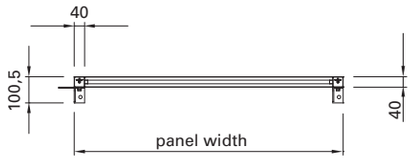

Panel Options:
Weld Mesh or
4 mm thick Polycarbonate

Note for Polycarbonate panel option:
Any special widths from 152 mm to 1506 are available.

Order Code

Description	Panel Width	Panel Option	Order Code	Weight
Basic Panel Special Width	0131	Weld Mesh	SBE 0131 SNA 2200	7.578 kg
Basic Panel Special Width	0174	Weld Mesh	SBE 0174 SNA 2200	8.046 kg
Basic Panel Special Width	0217	Weld Mesh	SBE 0217 SNA 2200	8.515 kg
Basic Panel Special Width	0260	Weld Mesh	SBE 0260 SNA 2200	8.984 kg
Basic Panel Special Width	0303	Weld Mesh	SBE 0303 SNA 2200	9.453 kg
Basic Panel Special Width	0346	Weld Mesh	SBE 0346 SNA 2200	9.922 kg
Basic Panel Special Width	0389	Weld Mesh	SBE 0389 SNA 2200	10.391 kg
Basic Panel Special Width	0432	Weld Mesh	SBE 0432 SNA 2200	10.859 kg
Basic Panel Special Width	0475	Weld Mesh	SBE 0475 SNA 2200	11.328 kg
Basic Panel Special Width	0561	Weld Mesh	SBE 0561 SNA 2200	12.266 kg
Basic Panel Special Width	0604	Weld Mesh	SBE 0604 SNA 2200	12.735 kg
Basic Panel Special Width	0647	Weld Mesh	SBE 0647 SNA 2200	13.204 kg
Basic Panel Special Width	0690	Weld Mesh	SBE 0690 SNA 2200	13.672 kg
Basic Panel Special Width	0733	Weld Mesh	SBE 0733 SNA 2200	14.141 kg
Basic Panel Special Width	0819	Weld Mesh	SBE 0819 SNA 2200	15.079 kg
Basic Panel Special Width	0862	Weld Mesh	SBE 0862 SNA 2200	15.548 kg
Basic Panel Special Width	0905	Weld Mesh	SBE 0905 SNA 2200	16.018 kg
Basic Panel Special Width	0948	Weld Mesh	SBE 0948 SNA 2200	16.487 kg
Basic Panel Special Width	0991	Weld Mesh	SBE 0991 SNA 2200	16.956 kg
Basic Panel Special Width	1077	Weld Mesh	SBE 1077 SNA 2200	17.894 kg
Basic Panel Special Width	1120	Weld Mesh	SBE 1120 SNA 2200	18.363 kg
Basic Panel Special Width	1163	Weld Mesh	SBE 1163 SNA 2200	18.832 kg
Basic Panel Special Width	1206	Weld Mesh	SBE 1206 SNA 2200	19.301 kg
Basic Panel Special Width	1249	Weld Mesh	SBE 1249 SNA 2200	19.770 kg
Basic Panel Special Width	1292	Weld Mesh	SBE 1292 SNA 2200	20.239 kg
Basic Panel Special Width	1335	Weld Mesh	SBE 1335 SNA 2200	20.708 kg
Basic Panel Special Width	1378	Weld Mesh	SBE 1378 SNA 2200	21.177 kg
Basic Panel Special Width	1421	Weld Mesh	SBE 1421 SNA 2200	21.646 kg
Basic Panel Special Width	1464	Weld Mesh	SBE 1464 SNA 2200	22.115 kg

SBS 1044 Basic Single Door

Left-hand hung Single Door

Design tip:
Safety fence door elements may need to be additionally grounded.

Application
For general safety fencing

Technical Data
Material: EN AW-6063-T66 clear anodized aluminum; galvanized steel, powder-coated, chrome silver steel; black ABS V0 composite; Weld Mesh or Polycarbonate; conductive Weld Mesh and frame; Safety Fence Floor Bracket height adjustable from - 20 / + 5 mm

Scope of Delivery
Completely pre-assembled, consisting of:
- 2 Post Extrusions 40 x 80 PIL 4180
- 1 Horizontal Extrusion 40 x 40 PIL 4140
- 4 Door Panel Extrusions 40 x 40 PIL 4140
- 6 Fasteners FAS 4043, conductive
- 1 Safety Fence Fastener TIN 4511
- 4 End Caps CAP 4041
- 2 End Caps CAP 4081
- 4 Safety Fence Floor Brackets BAP 2051
- 1 Handle DOR 4501
- 3 Hinges DOR 4511
- 1 Door Catch DOR 4553
- 1 Door Stop DOR 4555

Panel option according to the order code:
- Weld Mesh with Weld Mesh Clip and Safety Fence Mesh Retainer
- Polycarbonate with Panel Profile

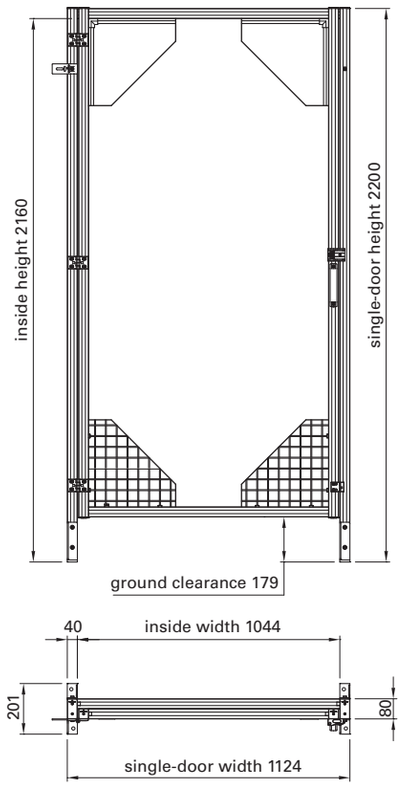

Order Code

Description	Hinge Position	Panel Option	Order Code	Weight
Basic Single Door	Left	Weld Mesh	SBS 1044 SLA 2160	29.974 kg
Basic Single Door	Right	Weld Mesh	SBS 1044 SRA 2160	29.974 kg
Basic Single Door	Left	Polycarbonate	SBS 1044 PLA 2160	31.795 kg
Basic Single Door	Right	Polycarbonate	SBS 1044 PRA 2160	31.795 kg

Drawing dimensions in mm

SBD 2083 Basic Double Door

Left-hand hung Double Door

Design tip:
Safety fence door elements may need to be additionally grounded.

Application
For general safety fencing

Technical Data
Material: EN AW-6063-T66 clear anodized aluminum; galvanized steel, powder-coated, chrome silver steel; black ABS V0 composite; Weld Mesh or Polycarbonate; conductive Weld Mesh and frame; Safety Fence Floor Bracket height adjustable from - 20 / + 5 mm

Scope of Delivery
Completely pre-assembled, consisting of:
- 2 Post Extrusions 40 x 80 PIL 4180
- 1 Horizontal Extrusion 40 x 40 PIL 4140
- 8 Door Panel Extrusions 40 x 40 PIL 4140
- 10 Fasteners FAS 4043, conductive
- 1 Safety Fence Fastener TIN 4511
- 7 End Caps CAP 4041
- 2 End Caps CAP 4081
- 4 Safety Fence Floor Brackets BAP 2051
- 1 Handle DOR 4501
- 6 Hinges DOR 4511
- 1 Door Catch DOR 4553
- 1 Door Stop DOR 4555
- 1 Floor Catch DOR 4561

Panel option according to the order code:
- Weld Mesh with Weld Mesh Clip and Safety Fence Mesh Retainer
- Polycarbonate with Panel Profile

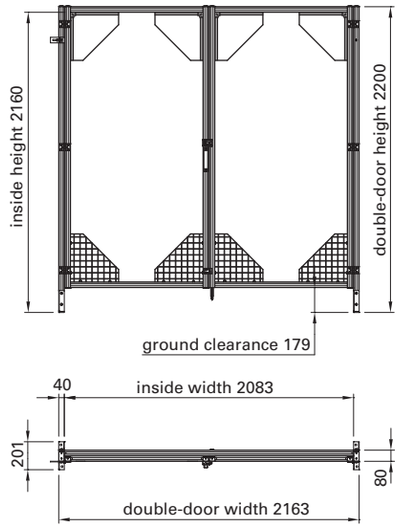

Floor Catch

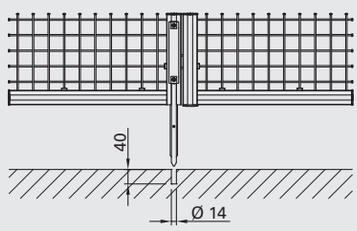

Order Code

Description	Hinge Position	Panel Option	Order Code	Weight
Basic Double Door	Left	Weld Mesh	SBD 2083 SLA 2160	48.098 kg
Basic Double Door	Right	Weld Mesh	SBD 2083 SRA 2160	48.098 kg
Basic Double Door	Left	Polycarbonate	SBD 2083 PLA 2160	51.739 kg
Basic Double Door	Right	Polycarbonate	SBD 2083 PRA 2160	51.739 kg

Drawing dimensions in mm

SBF 0872 Basic Sliding Door

Sliding door opening on right

Design tip:
Safety fence door elements may need to be additionally grounded.

Application
For general safety fencing

Technical Data
Material: EN AW-6063-T66 clear anodized aluminum; galvanized steel, powder-coated, chrome silver steel; black ABS V0 composite; Weld Mesh or Polycarbonate; conductive Weld Mesh and frame; Safety Fence Floor Bracket height adjustable from - 20 / + 5 mm

Scope of Delivery
Completely pre-assembled, consisting of:
- 2 Post Extrusions 40 x 80 PIL 4180
- 1 Horizontal Extrusion 40 x 40 PIL 4140
- 4 Sliding Door Extrusions 40 x 40 PIL 4140
- 3 Fixed Panel Extrusions 40 x 40 PIL 4140
- 10 Fasteners FAS 4043, conductive
- 1 Fastener FAS 4083
- 1 Safety Fence Fastener TIN 4511
- 9 End Caps CAP 4041
- 5 Safety Fence Floor Brackets BAP 2051
- 2 Roller Sets DOR 4031
- 2 Sliding Door Stops DOR 4032
- 1 Aluminum Guiderail DOL 4034
- 1 Handle DOR 4501
- 2 Centering Guides DOR 4571
- 2 Sliders DOR 4573

Panel option according to the order code:
- Weld Mesh with Weld Mesh Clip and Safety Fence Mesh Retainer
- Polycarbonate with Panel Profile

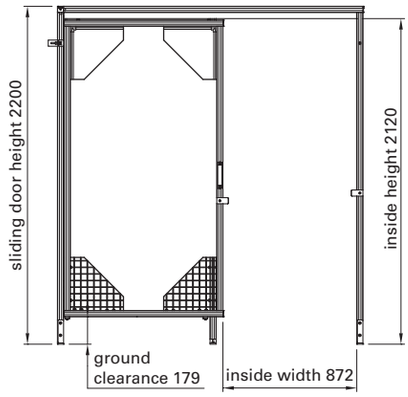

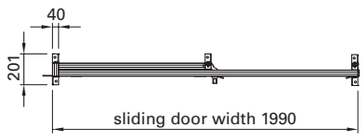

Rubber stop

Rubber stop with retention spring

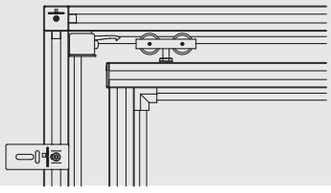

Order Code

Description	Door Opening	Panel Option	Order Code	Weight
Basic Sliding Door	Left	Weld Mesh	SBF 0872 SLA 2120	46.060 kg
Basic Sliding Door	Right	Weld Mesh	SBF 0872 SRA 2120	46.060 kg
Basic Sliding Door	Left	Polycarbonate	SBF 0872 PLA 2120	50.202 kg
Basic Sliding Door	Right	Polycarbonate	SBF 0872 PRA 2120	50.202 kg

Drawing dimensions in mm

Safety Fence Application Examples

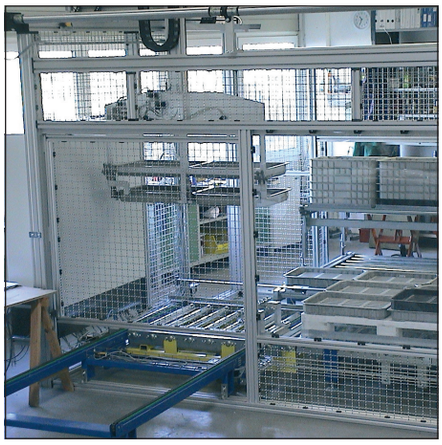

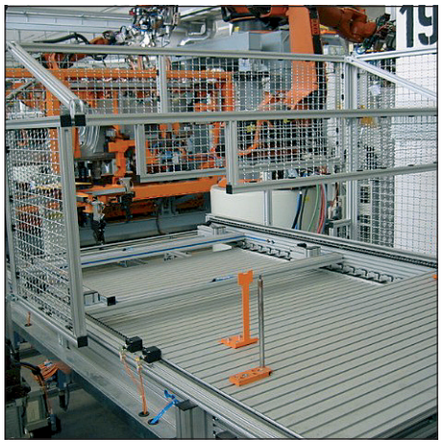
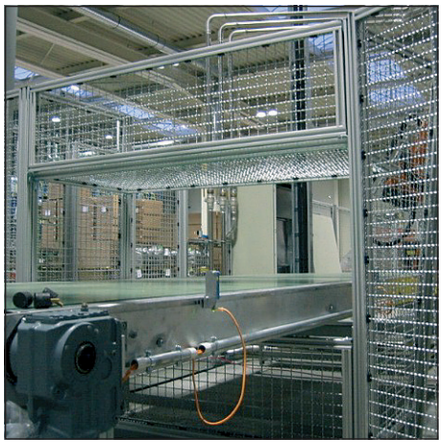

Allround System

The Allround system offers high flexibility. Panels can be attached and removed from the pre-assembled posts. This allows for easy access to the safety area without disconnecting any accessories attached to the posts, e.g. air hoses, safety equipment etc.
The Allround system is capable of stopping up to 80 kg at 10 km/h.

How does the Allround system work?
In the Allround System, Allround panels (A) are fitted and bolted to the pre-assembled posts (P).

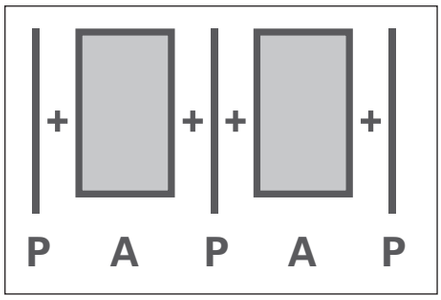

Allround System Overview

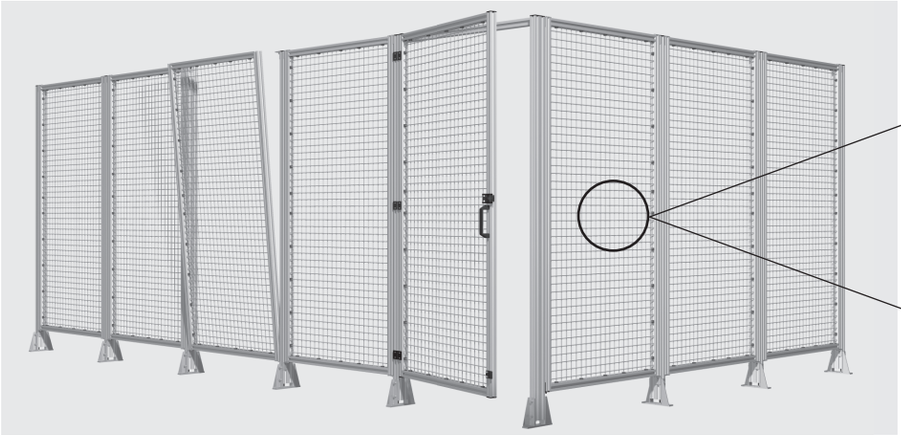

Panel Options

Weld Mesh with Weld Mesh Clip

Polycarbonate with Panel Profile

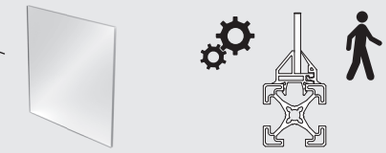

Allround Panel and Post

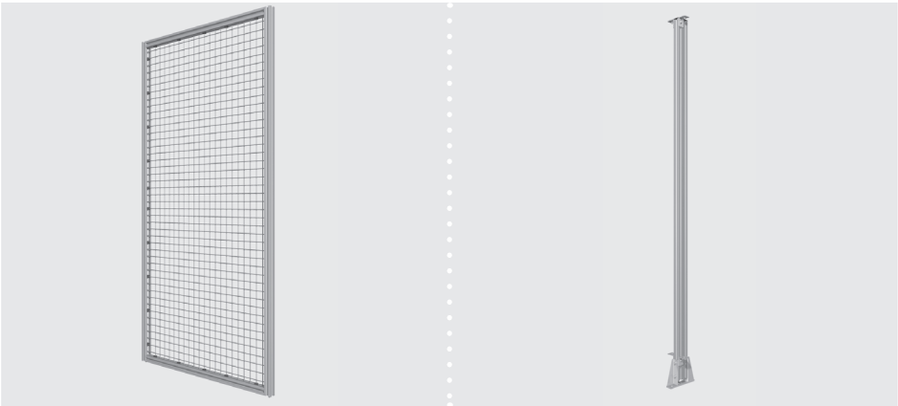

Allround Doors

Single Door

Double Door

Sliding Door

Allround System Dimensions

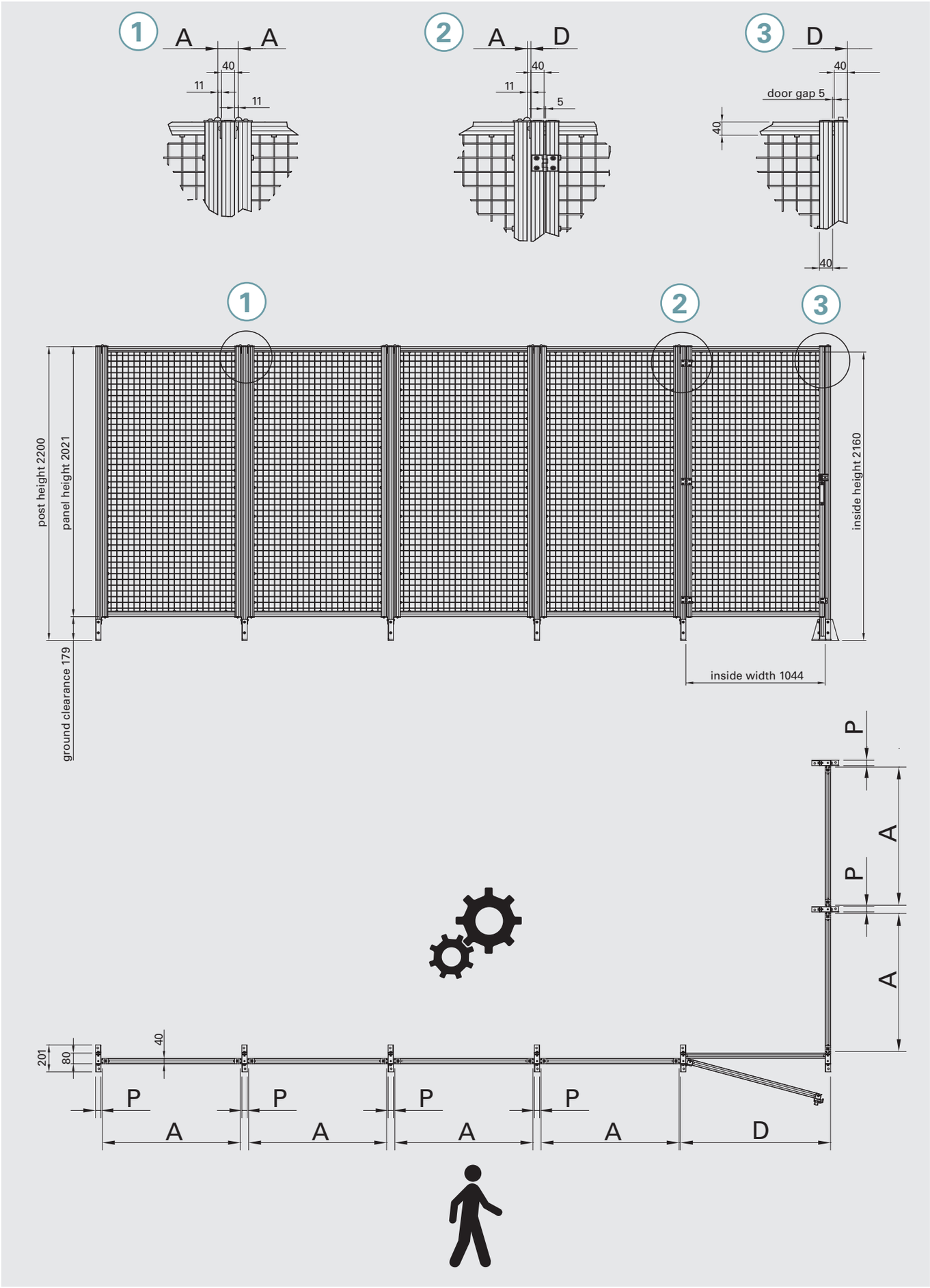

SAE ____ Allround Panel Standard Width

Panel Options:
Weld Mesh or
4 mm thick Polycarbonate

Application
For general safety fencing in combination with Allround posts

Technical Data
Material: EN AW-6063-T66 clear anodized aluminum; galvanized steel; Weld Mesh or Polycarbonate; conductive Weld Mesh and frame

Scope of Delivery
Completely pre-assembled, consisting of:
- 4 Extrusions 40x40 PIL 4140
- 4 Fasteners FAS 4043, conductive
- 2 Bolts SSP 4900

Panel option according to the order code:
- Weld Mesh with Weld Mesh Clip and Safety Fence Mesh Retainer
- Polycarbonate with Panel Profile

Design tip:
Standard widths offer an outstanding price/performance ratio and quick delivery.

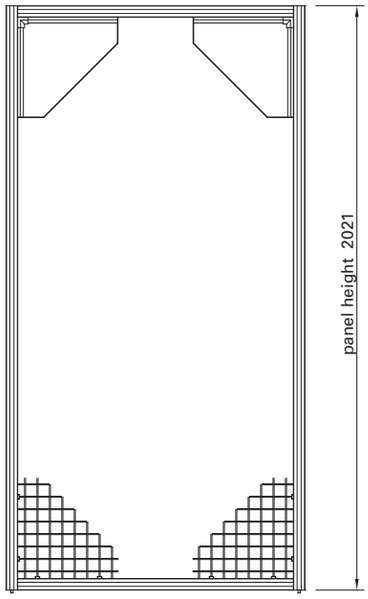

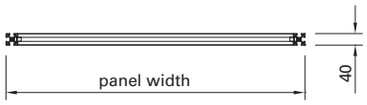

Order Code

Description	Panel Width	Panel Option	Order Code	Weight
Allround Panel Standard Width	0518	Weld Mesh	SAE 0518 SNN 2021	10.034 kg
Allround Panel Standard Width	0776	Weld Mesh	SAE 0776 SNN 2021	12.847 kg
Allround Panel Standard Width	1034	Weld Mesh	SAE 1034 SNN 2021	15.661 kg
Allround Panel Standard Width	1507	Weld Mesh	SAE 1507 SNN 2021	20.820 kg
Allround Panel Standard Width	0518	Polycarbonate	SAE 0518 PNN 2021	11.230 kg
Allround Panel Standard Width	0776	Polycarbonate	SAE 0776 PNN 2021	14.356 kg
Allround Panel Standard Width	1034	Polycarbonate	SAE 1034 PNN 2021	17.482 kg
Allround Panel Standard Width	1507	Polycarbonate	SAE 1507 PNN 2021	23.214 kg

Drawing dimensions in mm

SAE ____ Allround Panel Special Width

Panel Options:
Weld Mesh or
4 mm thick Polycarbonate

Application
For general safety fencing in combination with Allround posts

Technical Data
Material: EN AW-6063-T66 clear anodized aluminum; galvanized steel, Weld Mesh or Polycarbonate; conductive Weld Mesh and frame

Scope of Delivery
Completely pre-assembled, consisting of:
- 4 Extrusions 40x40 PIL 4140
- 4 Fasteners FAS 4043, conductive
- 2 Bolts SSP 4900

Panel option according to the order code:
- Weld Mesh with Weld Mesh Clip and Safety Fence Mesh Retainer
- Polycarbonate with Panel Profile

Note for Polycarbonate panel option:
Any special widths from 152 mm to 1506 are available for 4 mm thick Polycarbonate panel option

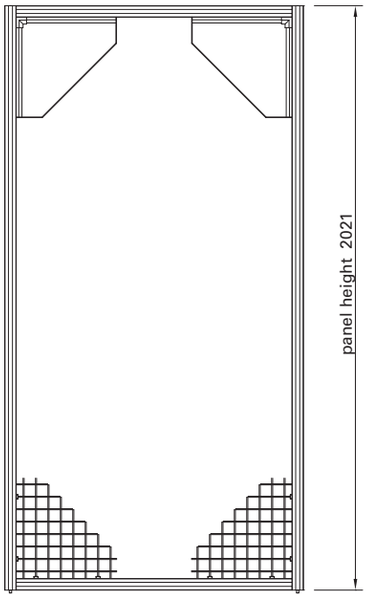

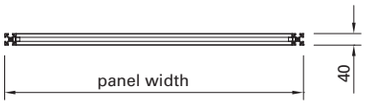

Order Code

Description	Panel Width	Panel Option	Order Code	Weight
Allround Panel Special Width	0131	Weld Mesh	SAE 0131 SNN 2021	5.815 kg
Allround Panel Special Width	0174	Weld Mesh	SAE 0174 SNN 2021	6.283 kg
Allround Panel Special Width	0217	Weld Mesh	SAE 0217 SNN 2021	6.752 kg
Allround Panel Special Width	0260	Weld Mesh	SAE 0260 SNN 2021	7.221 kg
Allround Panel Special Width	0303	Weld Mesh	SAE 0303 SNN 2021	7.690 kg
Allround Panel Special Width	0346	Weld Mesh	SAE 0346 SNN 2021	8.159 kg
Allround Panel Special Width	0389	Weld Mesh	SAE 0389 SNN 2021	8.628 kg
Allround Panel Special Width	0432	Weld Mesh	SAE 0432 SNN 2021	9.096 kg
Allround Panel Special Width	0475	Weld Mesh	SAE 0475 SNN 2021	9.565 kg
Allround Panel Special Width	0561	Weld Mesh	SAE 0561 SNN 2021	10.503 kg
Allround Panel Special Width	0604	Weld Mesh	SAE 0604 SNN 2021	10.972 kg
Allround Panel Special Width	0647	Weld Mesh	SAE 0647 SNN 2021	11.441 kg
Allround Panel Special Width	0690	Weld Mesh	SAE 0690 SNN 2021	11.909 kg
Allround Panel Special Width	0733	Weld Mesh	SAE 0733 SNN 2021	12.378 kg
Allround Panel Special Width	0819	Weld Mesh	SAE 0819 SNN 2021	13.316 kg
Allround Panel Special Width	0862	Weld Mesh	SAE 0862 SNN 2021	13.785 kg
Allround Panel Special Width	0905	Weld Mesh	SAE 0905 SNN 2021	14.254 kg
Allround Panel Special Width	0948	Weld Mesh	SAE 0948 SNN 2021	14.723 kg
Allround Panel Special Width	0991	Weld Mesh	SAE 0991 SNN 2021	15.192 kg
Allround Panel Special Width	1077	Weld Mesh	SAE 1077 SNN 2021	16.130 kg
Allround Panel Special Width	1120	Weld Mesh	SAE 1120 SNN 2021	16.599 kg
Allround Panel Special Width	1163	Weld Mesh	SAE 1163 SNN 2021	17.068 kg
Allround Panel Special Width	1206	Weld Mesh	SAE 1206 SNN 2021	17.537 kg
Allround Panel Special Width	1249	Weld Mesh	SAE 1249 SNN 2021	18.006 kg
Allround Panel Special Width	1292	Weld Mesh	SAE 1292 SNN 2021	18.475 kg
Allround Panel Special Width	1335	Weld Mesh	SAE 1335 SNN 2021	18.944 kg
Allround Panel Special Width	1378	Weld Mesh	SAE 1378 SNN 2021	19.413 kg
Allround Panel Special Width	1421	Weld Mesh	SAE 1421 SNN 2021	19.882 kg
Allround Panel Special Width	1464	Weld Mesh	SAE 1464 SNN 2021	20.351 kg

Drawing dimensions in mm

SAP 4180 Allround Post

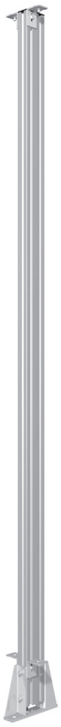

Attachment of Safety Fence Fastener, Type A

Application
Posts for Safety Fence Components

Technical Data
Material: EN AW-6063-T66 clear anodized aluminum; galvanized steel, powder-coated, chrome silver steel; black ABS V0 composite, conductive, Safety Fence Floor Bracket height adjustable 20 - 5 mm with Screw Retainer

Scope of Delivery
Completely pre-assembled, consisting of:
- 1 Post Extrusion 40 x 80 PIL 4180
- 90° Safety Fence Fastener TIN 4521 as per attachment option
- 1 End Cap CAP 4081
- 2 Safety Fence Floor Brackets BAP 2051
- Screw Retainer SSP 5500 as per attachment option

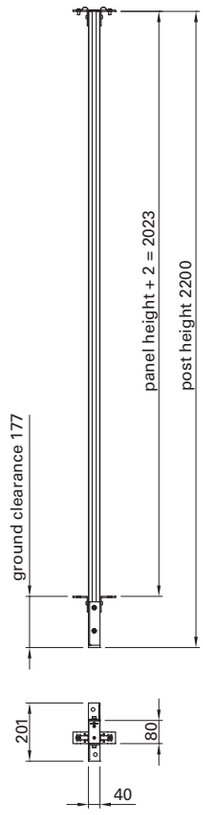

Safety Fence Fastener Attachment Options

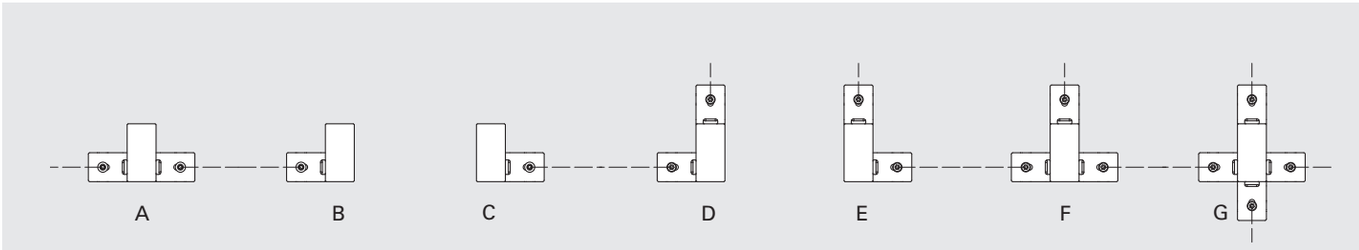

Order Code

Description	Extrusion	Attachment Option	Order Code	Weight
Allround Post	40 x 80	Type A	SAP 4180 ANA 2200	6.467 kg
Allround Post	40 x 80	Type B	SAP 4180 BNA 2200	6.187 kg
Allround Post	40 x 80	Type C	SAP 4180 CNA 2200	6.187 kg
Allround Post	40 x 80	Type D	SAP 4180 DNA 2200	6,467 kg
Allround Post	40 x 80	Type E	SAP 4180 ENA 2200	6,467 kg
Allround Post	40 x 80	Type F	SAP 4180 FNA 2200	6.747 kg
Allround Post	40 x 80	Type G	SAP 4180 GNA 2200	7.027 kg

Drawing dimensions in mm

SAS 1044 Allround Single Door

Left-hand hung Single Door

Design tip:
Safety fence door elements may need to be additionally grounded.

Application
For general safety fencing

Technical Data
Material: EN AW-6063-T66 clear anodized aluminum; galvanized steel, powder-coated, chrome silver steel; black ABS V0 composite; Weld Mesh or Polycarbonate; conductive Weld Mesh and frame; Safety Fence Floor Bracket height adjustable - 20 / + 5 mm, with Screw Retainer

Scope of Delivery
Completely pre-assembled, consisting of:
- 2 Post Extrusions 40 x 80 PIL 4180
- 1 Horizontal Extrusion 40 x 40 PIL 4140
- 4 Door Panel Extrusions 40 x 40 PIL 4140
- 6 Fasteners FAS 4043, conductive
- 4 90° Safety Fence FastenersTIN 4521
- 4 End Caps CAP 4041
- 2 End Caps CAP 4081
- 4 Safety Fence Floor Brackets BAP 2051
- 1 Handle DOR 4501
- 3 Hinges DOR 4511
- 1 Door Catch DOR 4553
- 1 Door Stop DOR 4555
- 2 Screw Retainers SSP 5500

Panel option according to the order code:
- Weld Mesh with Weld Mesh Clip and Safety Fence Mesh Retainer
- Polycarbonate with Panel Profile

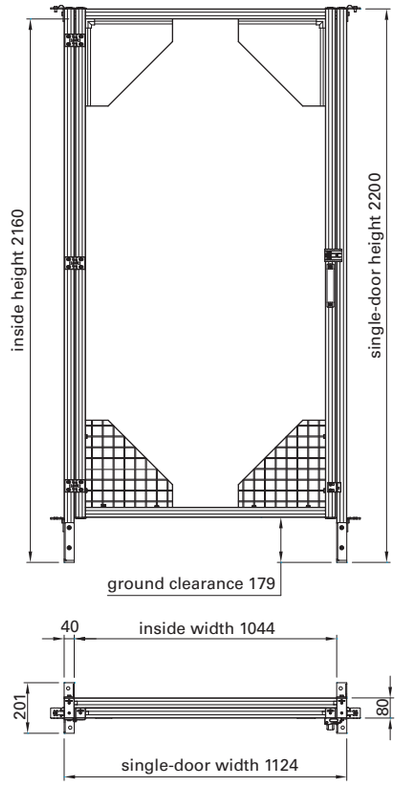

Order Code

Description	Hinge Position	Panel Option	Order Code	Weight
Allround Single Door	Left	Weld Mesh	SAS 1044 SLA 2160	30.381 kg
Allround Single Door	Right	Weld Mesh	SAS 1044 SRA 2160	30.381 kg
Allround Single Door	Left	Polycarbonate	SAS 1044 PLA 2160	32.202 kg
Allround Single Door	Right	Polycarbonate	SAS 1044 PRA 2160	32.202 kg

Drawing dimensions in mm

SAD 2083 Allround Double Door

Left-hand hung Double Door

Design tip:
Safety fence door elements may need to be additionally grounded.

Application
For general safety fencing

Technical Data
Material: EN AW-6063-T66 clear anodized aluminum; galvanized steel, powder-coated, chrome silver steel; black ABS V0 composite; Weld Mesh or Polycarbonate; conductive Weld Mesh and frame; Safety Fence Floor Bracket height adjustable - 20 / + 5 mm, with Screw Retainer

Scope of Delivery
Completely pre-assembled, consisting of:
- 2 Post Extrusions 40 x 80 PIL 4180
- 1 Horizontal Extrusion 40 x 40 PIL 4140
- 8 Door Panel Extrusions 40 x 40 PIL 4140
- 10 Fasteners FAS 4043, conductive
- 4 90° Safety Fence Fasteners TIN 4521
- 7 End Caps CAP 4041
- 2 End Caps CAP 4081
- 4 Safety Fence Floor Brackets BAP 2051
- 1 Handle DOR 4501
- 6 Hinges DOR 4511
- 1 Door Catch DOR 4553
- 1 Door Stop DOR 4555
- 1 Floor Catch DOR 4561
- 2 Screw Retainers SSP 5500

Panel option according to the order code:
- Weld Mesh with Weld Mesh Clip and Safety Fence Mesh Retainer
- Polycarbonate with Panel Profile

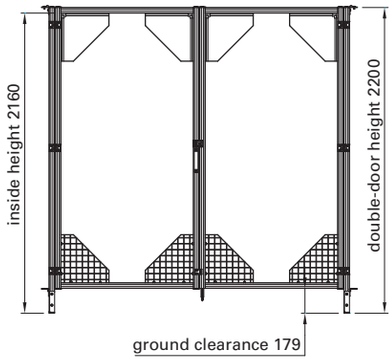

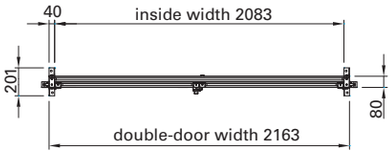

Floor Catch

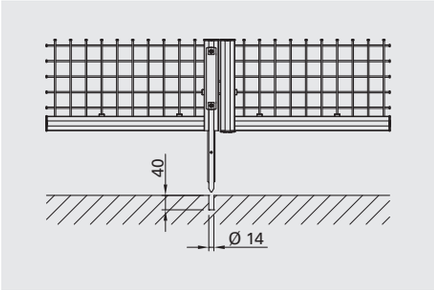

Order Code

Description	Hinge Position	Panel Option	Order Code	Weight
Allround Double Door	Left	Weld Mesh	SAD 2083 SLA 2160	48.505 kg
Allround Double Door	Right	Weld Mesh	SAD 2083 SRA 2160	48.505 kg
Allround Double Door	Left	Polycarbonate	SAD 2083 PLA 2160	52.146 kg
Allround Double Door	Right	Polycarbonate	SAD 2083 PRA 2160	52.146 kg

Drawing dimensions in mm

SAF 0872 Allround Sliding Door

Sliding door opening on right

Design tip:
Safety fence door elements may need to be additionally grounded.

Application
For general safety fencing

Technical Data
Material: EN AW-6063-T66 clear anodized aluminum; galvanized steel, powder-coated, chrome silver steel; black ABS V0 composite; Weld Mesh or Polycarbonate; conductive Weld Mesh and frame; Safety Fence Floor Bracket height adjustable - 20 / + 5 mm, with Screw Retainer

Scope of Delivery
Completely pre-assembled, consisting of:
- 2 Post Extrusions 40 x 80 PIL 4180
- 1 Horizontal Extrusion 40 x 40 PIL 4140
- 4 Sliding Door Extrusions 40 x 40 PIL 4140
- 3 Fixed Panel Extrusions 40 x 40 PIL 4140
- 10 Fasteners FAS 4043, conductive
- 1 Fastener FAS 4083
- 4 90° Safety Fence FastenersTIN 4521
- 9 End Caps CAP 4041
- 5 Safety Fence Floor Brackets BAP 2051
- 2 Roller Sets DOR 4031
- 2 Sliding Door Stops DOR 4032
- 1 Aluminum Guiderail DOL 4034
- 1 Handle DOR 4501
- 2 Centering Guides DOR 4571
- 2 Sliders DOR 4573
- 2 Screw Retainers SSP 5500

Panel option according to the order code:
- Weld Mesh with Weld Mesh Clip and Safety Fence Mesh Retainer
- Polycarbonate with Panel Profile

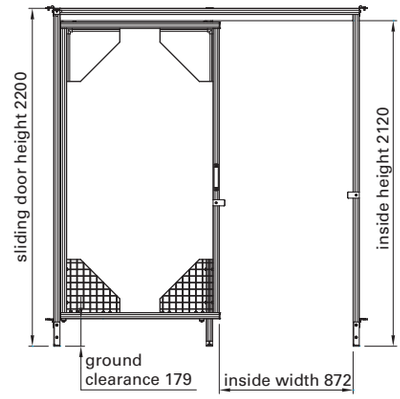

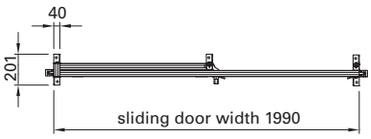

Rubber stop

Rubber stop with retention spring

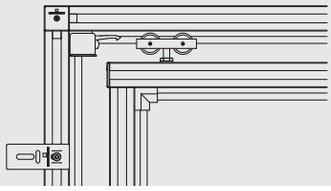

Order Code

Description	Door Opening	Panel Option	Order Code	Weight
Allround Sliding Door	Left	Weld Mesh	SAF 0872 SLA 2120	46.452 kg
Allround Sliding Door	Right	Weld Mesh	SAF 0872 SRA 2120	46.452 kg
Allround Sliding Door	Left	Polycarbonate	SAF 0872 PLA 2120	50.593 kg
Allround Sliding Door	Right	Polycarbonate	SAF 0872 PRA 2120	50.593 kg

Drawing dimensions in mm

THE VERSATILE MBS PICKSTAR

Modern factories are geared towards high speed production. Time pressure increases constantly. Changeover time between production runs need to be shorter. Therefore product cycles and demanding customers require a new dimension in flexibility.

The solution is now available: Robotunits expands its Modular Automation System with a unique concept for material handling. Only 8 multifunctional components allow for a large range of applications.

Individual lengths and widths
- Lane length and width can be easily adjusted
- No tools needed to change lane width
- Additional tracks can be added if load requires

Adjustable angle
- Infinitely adjustable angle
- Track can be attached to the tube clamp in the front, or in the T-slot of the extrusion
- Brakes can be inserted anywhere on the track to control the speed of the box

Safe and rigid design
- Rigid system through Robotunits Fastening Technology
- Tight fitting track covers prevent contamination of roller tracks
- Low noise level due to special gliding bearings
- Entire construction available for ESD
- Anti-Reverse can be placed anywhere on the track
- Colored anti-reverse shows maximum fill level

High Flexibility
- Open T-slots can be used to install additional components
- Tracks can be inserted in any of the Robotunits extrusions
- Quick assembly without special tools
- System can be easily adjusted for new requirements

System compatible
- All components fully compatible with the Robotunits Modular Automation System
- Multifunctional stop elements allow safe in-feed and removal of material
- Unlimited applications due to 14 mm T-slot
- Reduced inventory cost due to multifunctional parts

Save time, reduce cost
- Minimal design effort necessary
- Snap-in connections for quick assembly
- Minimal training required
- Individual adjustments possible

Rob_Kat16.1_Inhalt_e_neu_USA.indd 113 10.06.20 14:48

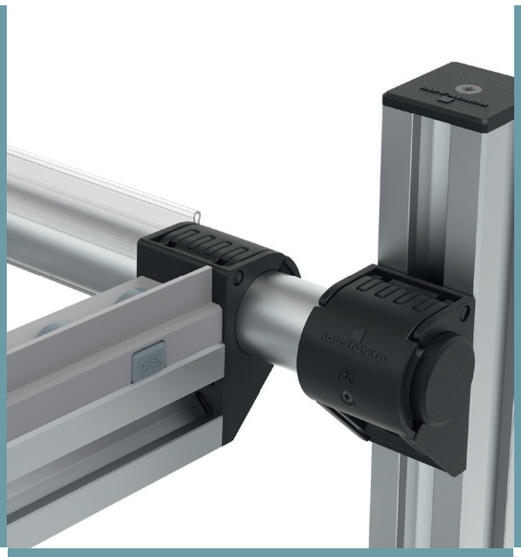

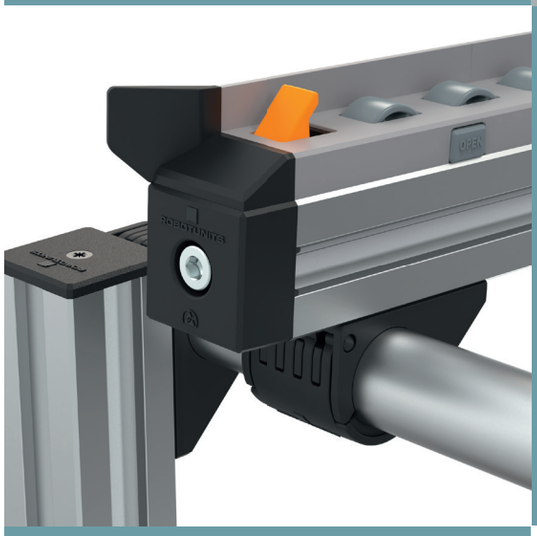

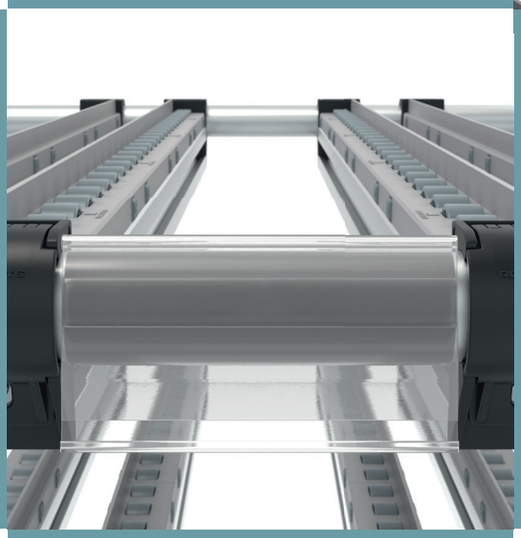

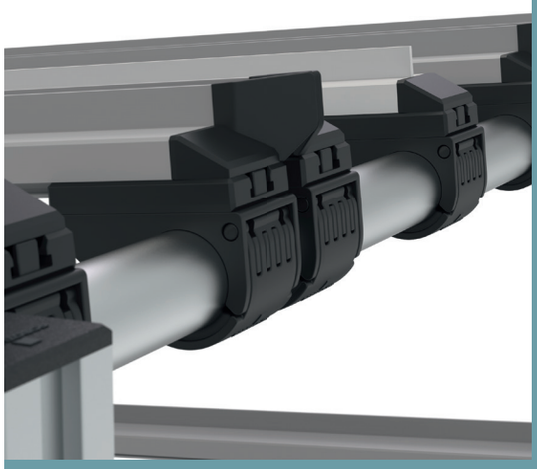

ROBOTUNITS®

The versatile MBS PickStar

MBS PickStar Overview Page 116

MBS PickStar Rolling Page 118

Roller Track
MA_ 456_

P. 120

Roller Track With
Side Guides
MA_ 459_

P. 121

Tube Clamp Front
MAT 30_1

P. 122

Front Part
MAT 455_

P. 123

Brake for Roller Track
MAT 4580

P. 124

Anti-Reverse For
Roller Track
MAT 4575

P. 125

Round Tube 30x2
PIL 3002

P. 132

Cover for Round
Tube 30x2
CAP 3002

P. 132

Label Holder
50 x 100
MAT 3050
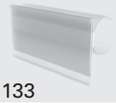
P. 133

MBS PickStar Sliding Page 126

Sliding Rail
MAL 453_

P. 128

Tube Adapter
MAT 303_

P. 129

Extrusion Adapter
MAT 403_

P. 130

Adapter
MAT 903_
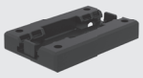
P. 131

Round Tube 30x2
PIL 3002
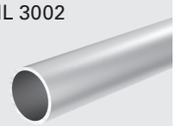
P. 132

Cover for Round
Tube 30x2
CAP 3002

P. 132

Label Holder
50x100
MAT 3050

P. 133

MBS PickStar Rolling

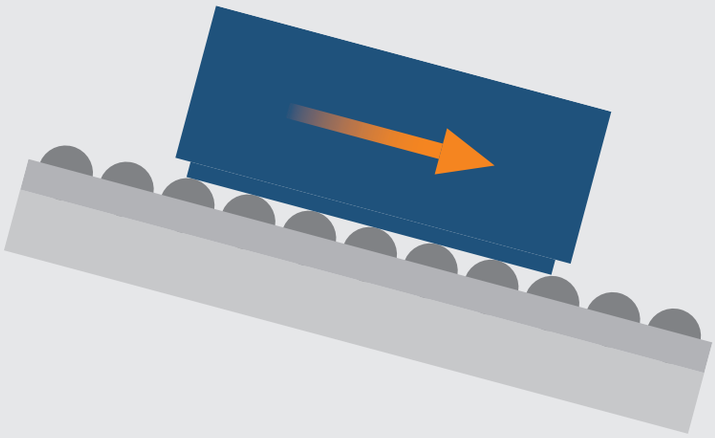

Properties
- Loads up to approx. 30 kg / box
- Conveying
- Gravity rollers
- Stable
- Individual assembly

Applications
- Roller conveyors
- Conveyor sections
- Material flow technology
- In-feed / out-feed conveyors
- Transport carts
- Rolling side guides

Compact System Options

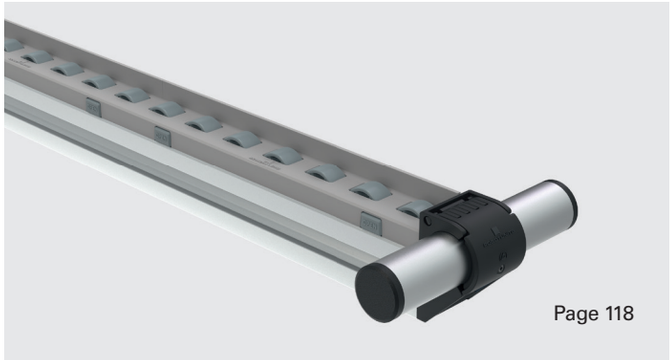

Page 118

Ergonomic System Options

Page 119

MBS PickStar Sliding

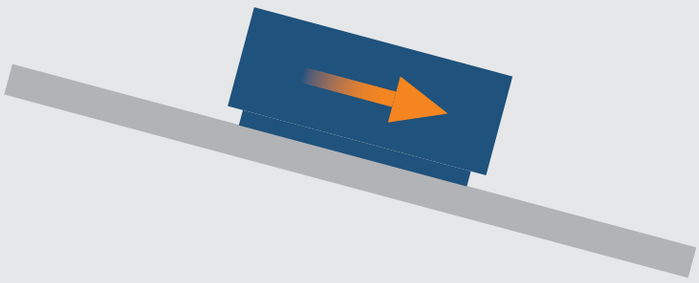

Properties
- Loads up to approx. 5 kg / box
- Storage (deposit, warehousing)
- Manual operation
- Low overall height
- Few components
- Low price

Applications
- Manual workstation

Round System Options

Page 126

Square System Options

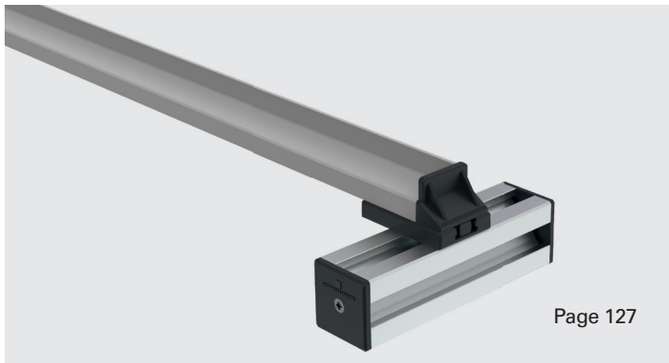

Page 127

MBS PickStar Rolling - Compact

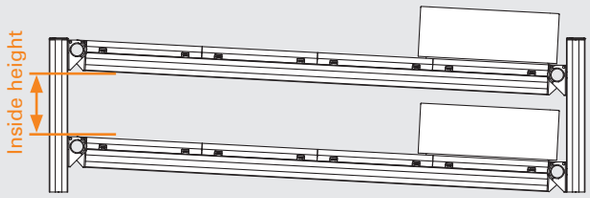

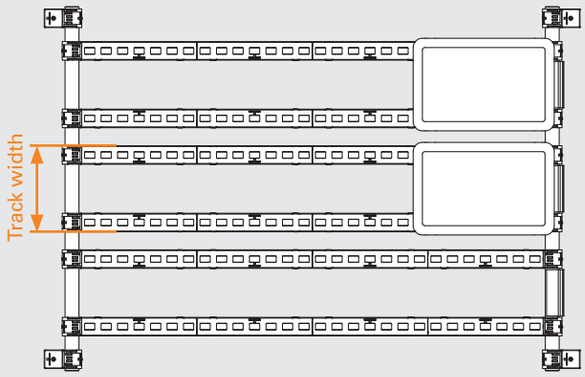

Benefits
- Flexible track width, inside height
- Lower overall height
- Few components

Application
- KANBAN carts, workstations

Freely combinable system options

Design MBS PickStar Rolling - Compact

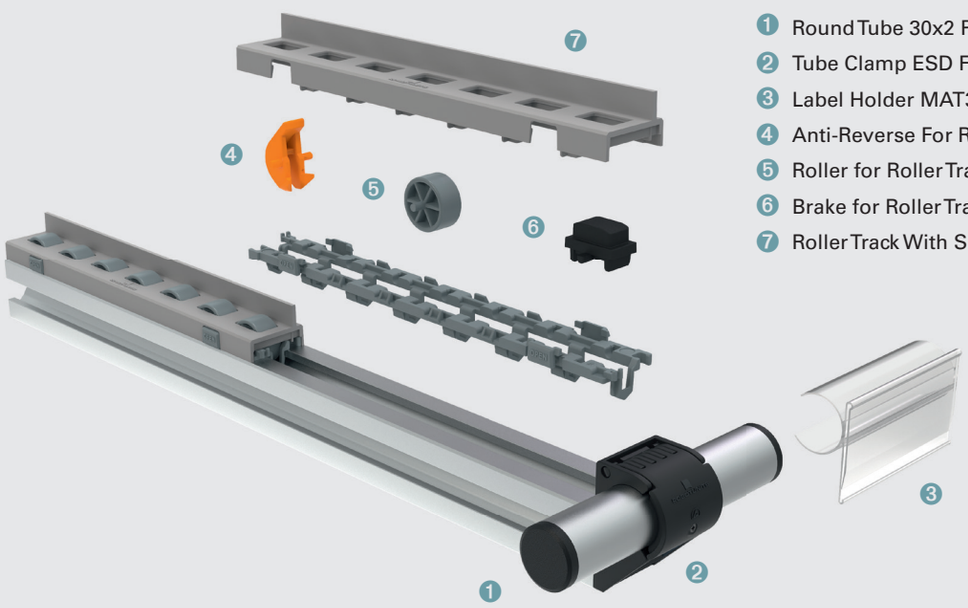

1. Round Tube 30x2 PIL3002 (page 132)
2. Tube Clamp ESD Front Kit MAT3011 (page 122)
3. Label Holder MAT3050 (page 133)
4. Anti-Reverse For Roller Track MAT 4575 (page 125)
5. Roller for Roller Track
6. Brake for Roller Track MAT4580 (as of page 124)
7. Roller Track With Side Guides MAT4591 (as of page 121)

MBS PickStar Rolling - Ergonomic

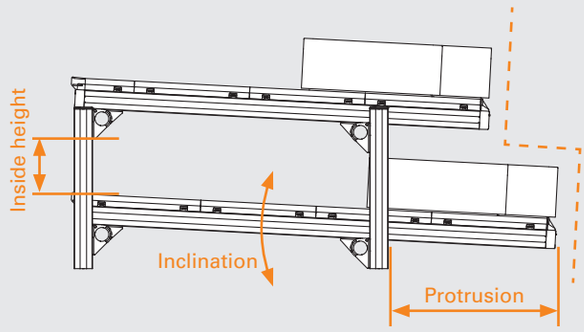

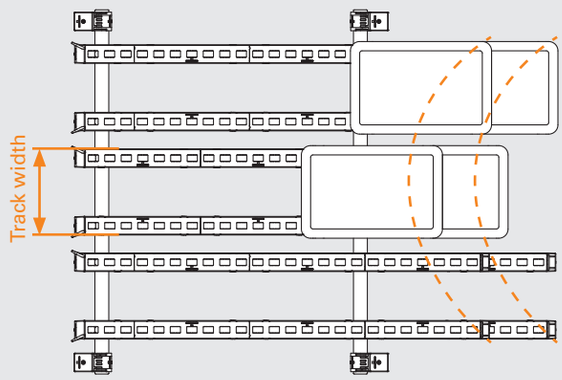

Benefits
- Flexible adjustable inclination, track width, protrusion, inside height
- Staggered configuration
- Individual arrangement

Application
- Ergonomic (semi-circular) gripping chamber application

Freely combinable system options

Design MBS PickStar Rolling - Ergonomic

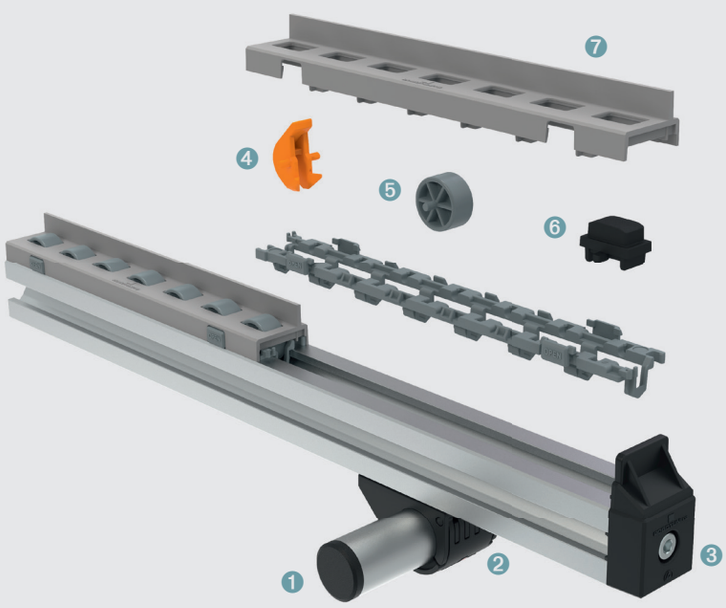

1. Round Tube 30x2 PIL3002 (page 132)
2. Tube Adapter ESD Kit (page 129)
3. Front Part ESD Stop Kit (page 123)
4. Anti-Reverse For Roller Track MAT 4575 (page 125)
5. Roller for Roller Track
6. Brake for Roller Track MAT4580 (as of page 124)
7. Roller Track With Side Guides MAT4591 (as of page 121)

MA_ 456_ Roller Track

MAT 4561

MAT 4563

Application

For roller conveyors, e.g. for:

- Material flow technology
- Manual workstations
- In- and out-feed conveyors
- Transport carts
- Rolling side guides

Technical Data

Material: Base part and gray PP or black PP cover (ESD conductive)
Roller gray POM-C or black POM-C (ESD conductive)

Max. load per unit 15 kg

Inclination angle (depending on the product to be transported)
MAT 4561: 4° to 5°
MAT 4563: 5° to 6°

Surface resistance per Roller Track
R_s < 35 MΩ

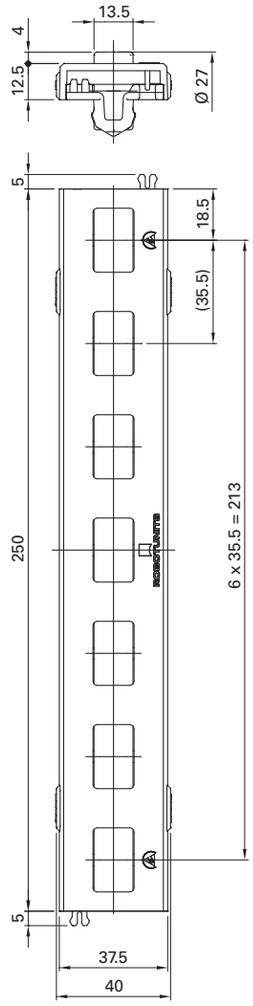

ESD Conductivity

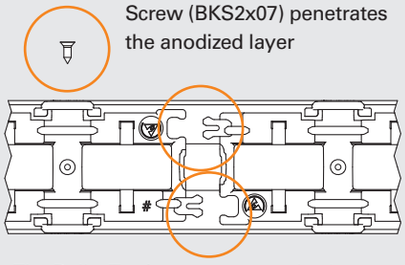

The Roller Tracks are connected using snap-in connections.

Order Code

Description	Scope of Delivery: Base Part	Cover	Castors	BKS2x07	Order Code[1] Length	Weight
Roller Track Kit	1	1	7	-	MAT 4561	0.112 kg
Roller Track Kit, cut to length	1	1	X[2]	-	MAL 4561 SNN ____[3]	0.448 kg/m
Roller Track ESD Kit	1	1	7	1	MAT 4563	0.114 kg
Roller Track ESD Kit, cut to length	1	1	X[2]	1	MAL 4563 SNN ____[3]	0.456 kg/m

1) Please complete the order code by adding the desired length.
2) Number of rollers depending on the length of the cut-to-length Roller Track
3) Ideal pre-cut lengths in the roller series (35.5 mm)
Drawing dimensions in mm

MA_ 459_ Roller Track With Side Guides

MAT 4591

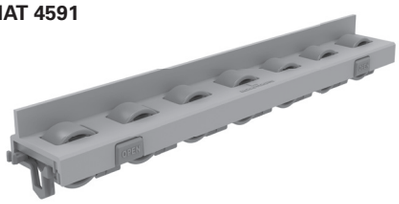

MAT 4593

Application

For roller conveyors, e.g. for:

- Material flow technology
- Manual workstations
- In- and out-feed conveyors
- Transport carts

Technical Data

Material: Base part and gray PP or black PP cover (ESD conductive)
Roller gray POM-C or black POM-C (ESD conductive)

Max. load per unit 15 kg

Inclination angle (depending on the product to be transported)
MAT 4591: 4° to 5°
MAT 4593: 5° to 6°

Surface resistance per Roller Track
R_S < 35 MΩ

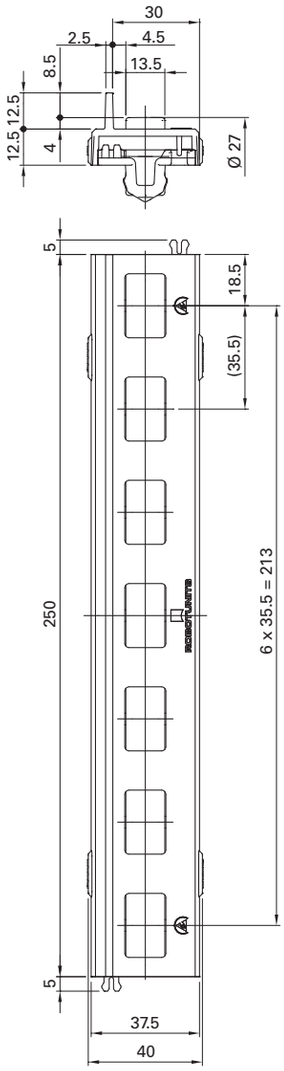

ESD Conductivity

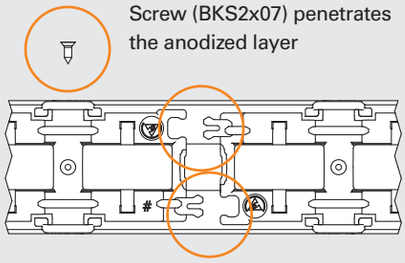

The Roller Tracks are connected using snap-in connections.

Order Code

Description	Scope of Delivery: Base Part	Cover	Castors	BKS2x07	Order Code[1] Length	Weight
Roller Track With Side Guide Kit	1	1	7	-	MAT 4591	0.122 kg
Roller Track With Side Guide Kit, cut-to-length	1	1	X[2]	-	MAL 4591 SNN ____[3]	0.488 kg/m
Roller Track ESD With Side Guide Kit	1	1	7	1	MAT 4593	0.124 kg
Roller Track ESD With Side Guide Kit, cut-to-length	1	1	X[2]	1	MAL 4593 SNN ____[3]	0.496 kg/m

1) Please complete the order code by adding the desired length.
2) Number of rollers depending on the length of the cut-to-length Roller Track
3) Ideal pre-cut lengths in the roller series (35.5 mm)
Drawing dimensions in mm

MAT 30_1 Tube Clamp Front

Application
Connector for fastening the Round Tube to the face or T-slot of the extrusion; Clamp can be opened without tools

Technical Data
Material: Base Part PA6, black (ESD conductive) Clamping Part PA6, black (ESD conductive) and TPV rubber, black
Fastening material: galvanized steel

Surface resistance per Tube Clamp
$R_S < 35\ M\Omega$

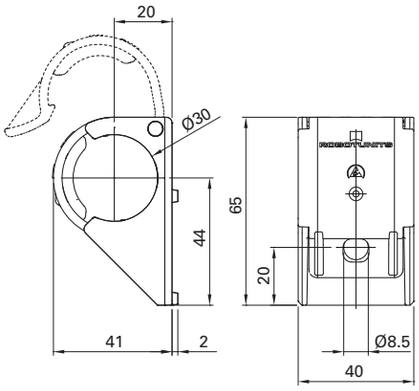

ESD Conductivity

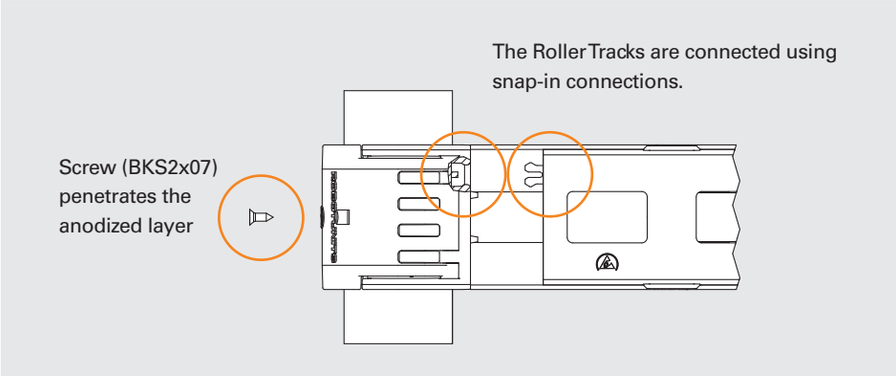

Compact Installed Height

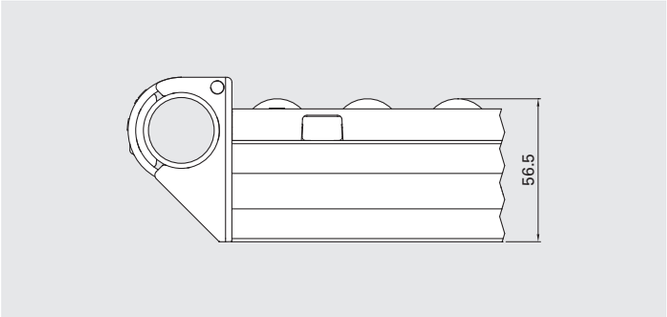

Ergonomic Installed Height

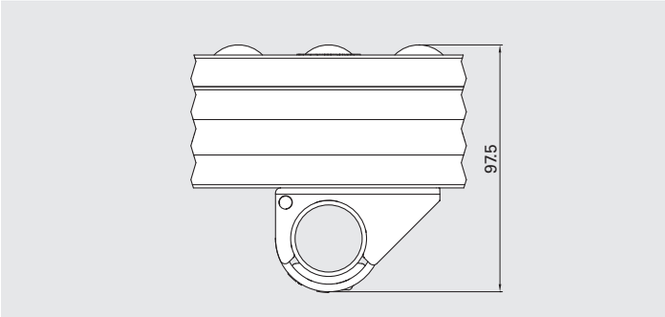

Order Code

	Scope of Delivery						Order Code	
Description	Base Part	Clamping Part	IBS M08x018NIKO	BLS M008S02	BKS 2x07	TIN4598		Weight
Tube Clamp ESD Front Kit	1	1	1	1	1	-	MAT 3011	0.052 kg
Tube Clamp ESD T-Slot Kit	1	1	1	1	1	1	MAT 3021	0.062 kg

Drawing dimensions in mm

MAT 455_ Front Part

MAT 4553

Stop Insert

IBS M08x025

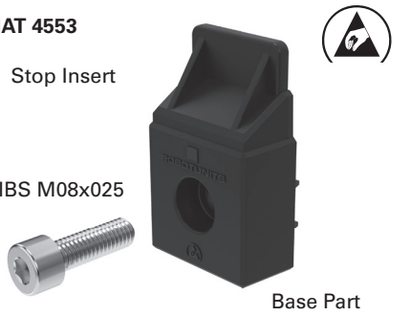

Base Part

MAT 4555

Flat Insert

IBS M08x025

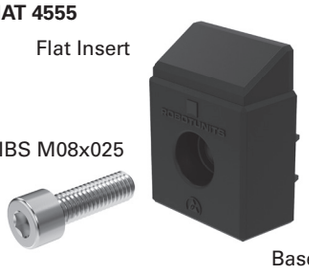

Base Part

MAT 4557

Left Insert

IBS M08x025

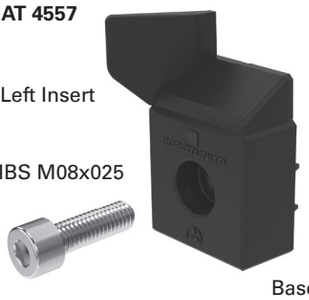

Base Part

MAT 4559

Right Insert

IBS M08x025

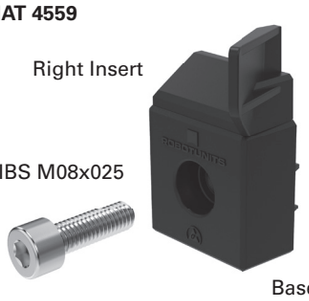

Base Part

Application

Material stop at the start or the end of the Roller Track

In-feed, removal or transfer support in combination with Roller Track Without Side Guides

Technical Data

Material: PA6, black (ESD conductive)

Fastening material: galvanized steel

Surface resistance per Front Part

$R_S < 35\ M\Omega$

ESD Conductivity

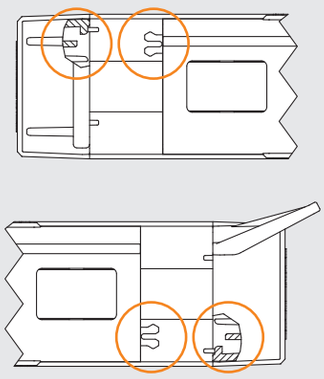

The Roller Tracks are connected using snap-in connections.

MAT 4553

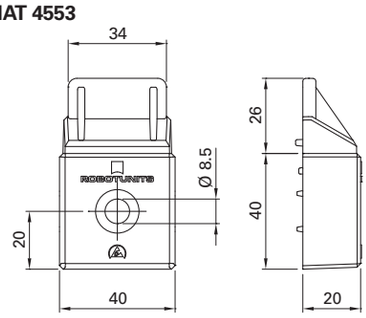

MAT 4555

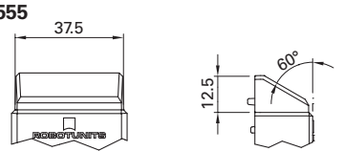

MAT 4557

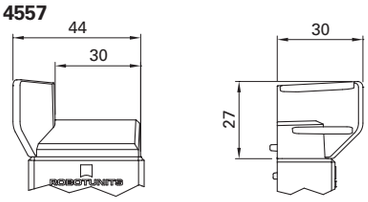

MAT 4559

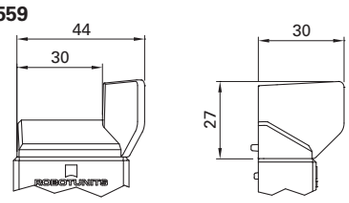

Variable Inserts

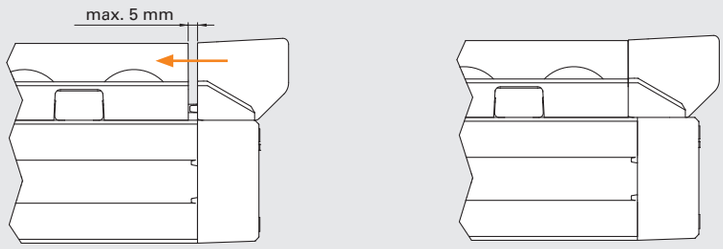

Gap between Roller Track and Front Part can be closed by a Variable Insert

Order Code

Description	Scope of Delivery: Base Part	Insert	IBS M08x025	Order Code	Weight
Front Part ESD Stop Kit	1	1 (stop)	1	MAT 4553	0.036 kg
Front Part ESD Flat Kit	1	1 (flat)	1	MAT 4555	0.034 kg
Front Part ESD left Kit	1	1 (left)	1	MAT 4557	0.035 kg
Front Part ESD Right Kit	1	1 (right)	1	MAT 4559	0.035 kg

Drawing dimensions in mm

MAT 4580 Brake For Roller Track

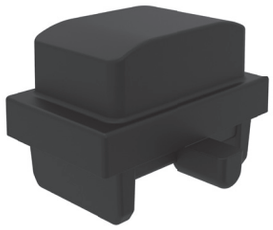

Application
Slowing down the transported product

Technical Data
Material: TPV rubber, black

Easy retrofitting possible.
(Switch Roller with Brake)
Depending on the product (weight, condition of bottom, etc.) several Brakes can be installed

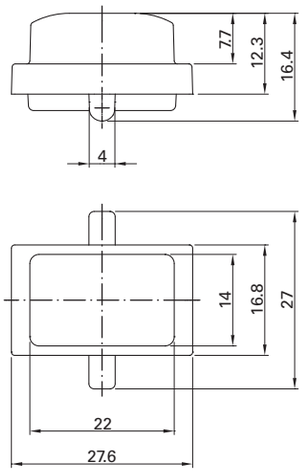

Function

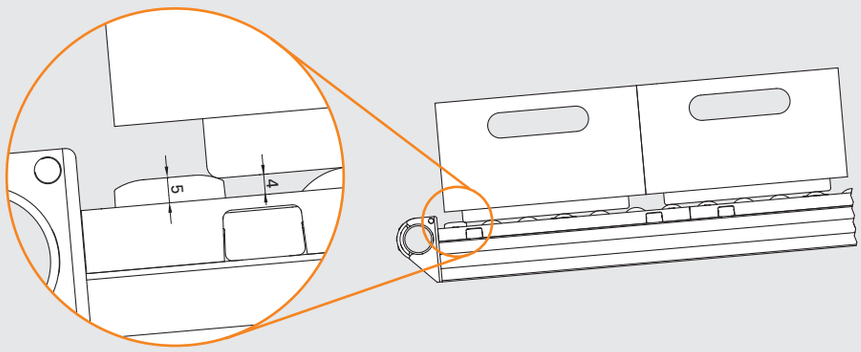

Order Code

Description	Order Code	Weight
Brake For Roller Track	MAT 4580	0.003 kg

Drawing dimensions in mm

MAT 4575 Anti-Reverse For Roller Track

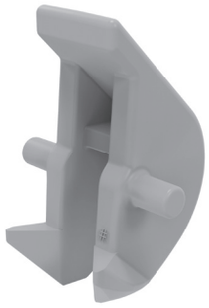

Application
Material stop at the start or end of the Roller Track
Prevents product at the back of the shelf from sliding down when product at the front is removed

Fill level indicator through signal color (visible = empty)

Technical Data
Material: POM-C orange

Easy retrofitting possible.
(Switch Roller with Anti-Reverse for Roller Track)

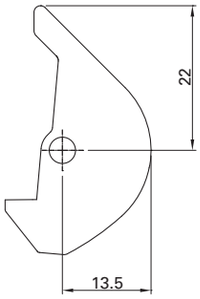

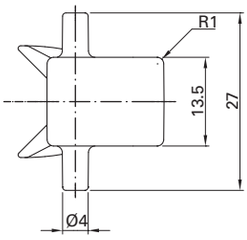

Function

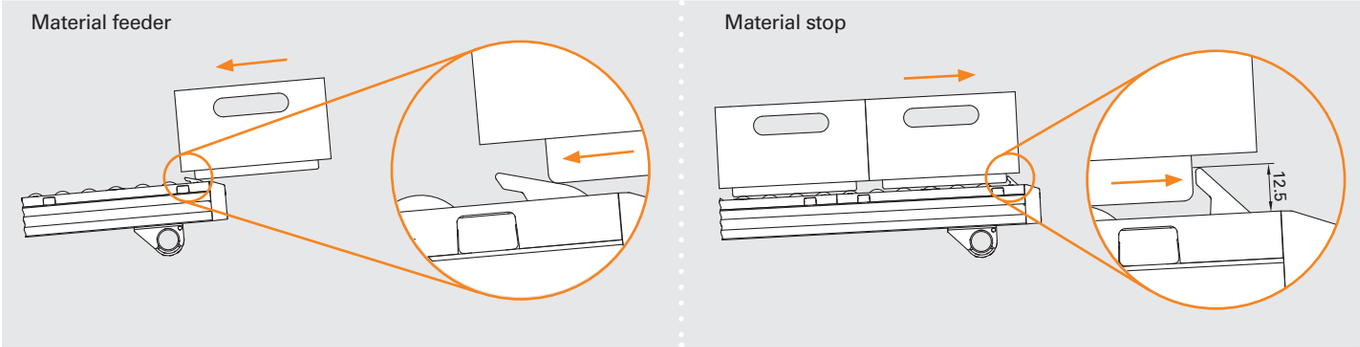

Order Code

Description	Order Code	Weight
Anti-Reverse For Roller Track Kit	MAT 4575	0.006 kg

Drawing dimensions in mm

MBS PickStar Sliding - Round

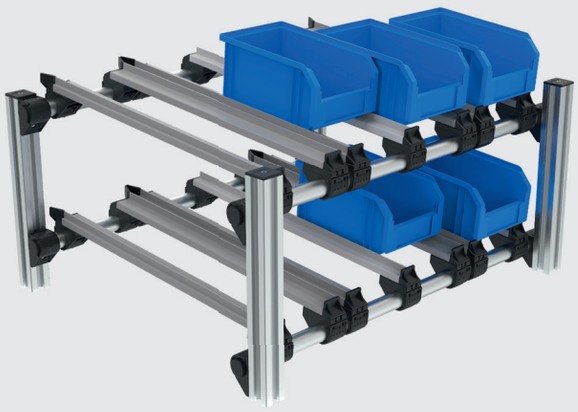

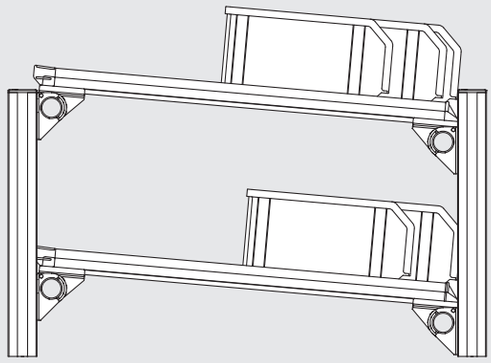

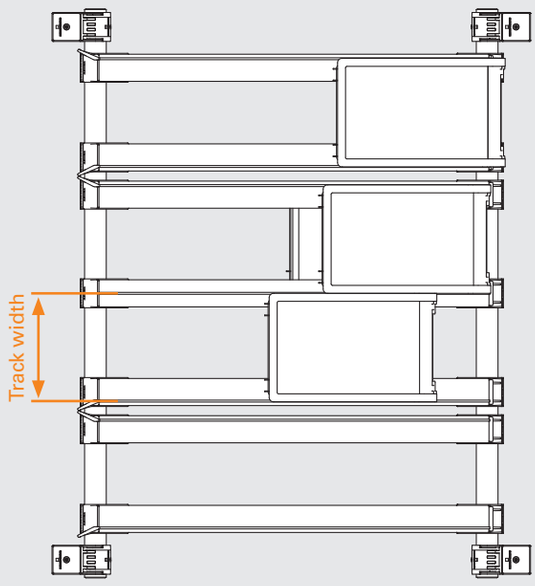

Benefits
- Flexible adjustable track width
- Simpler assembly
- Freely adjustable incline

Application
Workstation with short tracks

Design MBS PickStar Sliding - Round

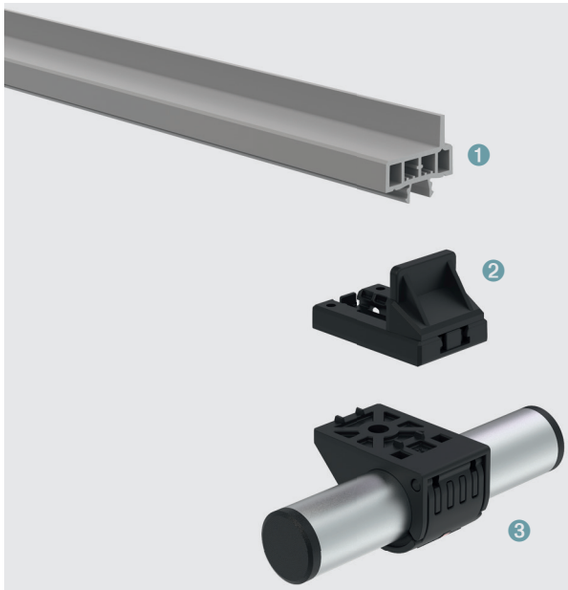

1. Sliding Rail With Side Guide MAL4532 (page 118)
2. Tube Adapter ESD Stop Kit MAT3033 (page 119)
3. Round Tube 30x2 PIL3002 (page 122)

MBS PickStar Sliding - Square

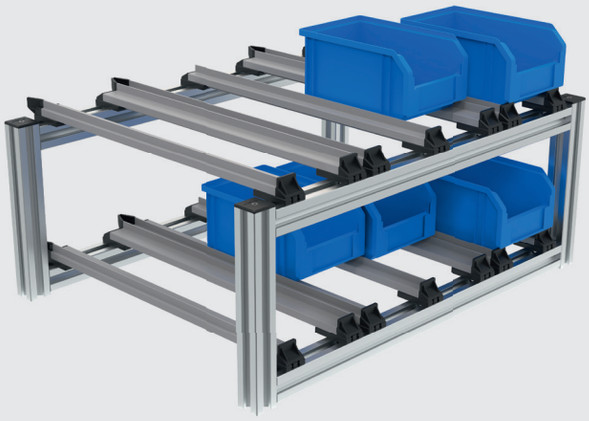

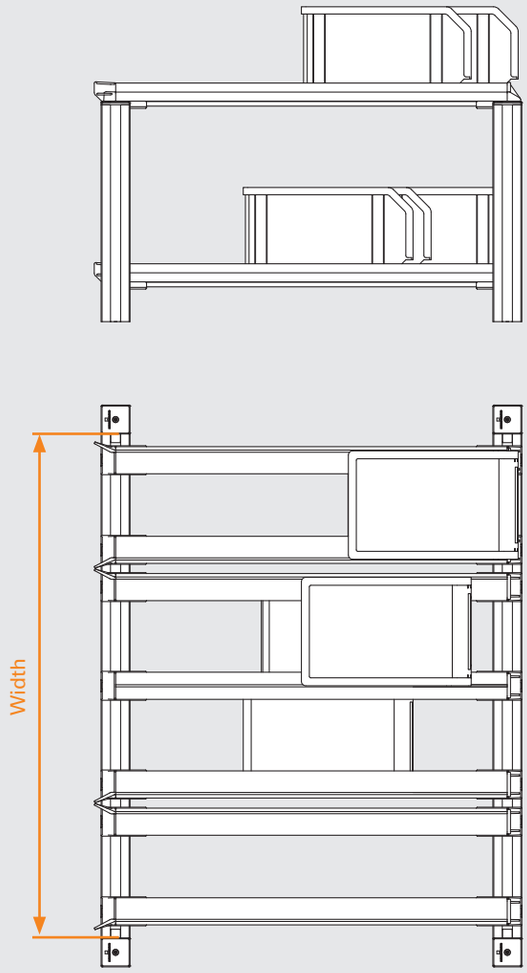

Benefits
- Sturdy frame design
- Greater width
- Subsequent installation directly onto extrusions

Application
Integration into existing extrusion frame

Design MBS PickStar Sliding - Square

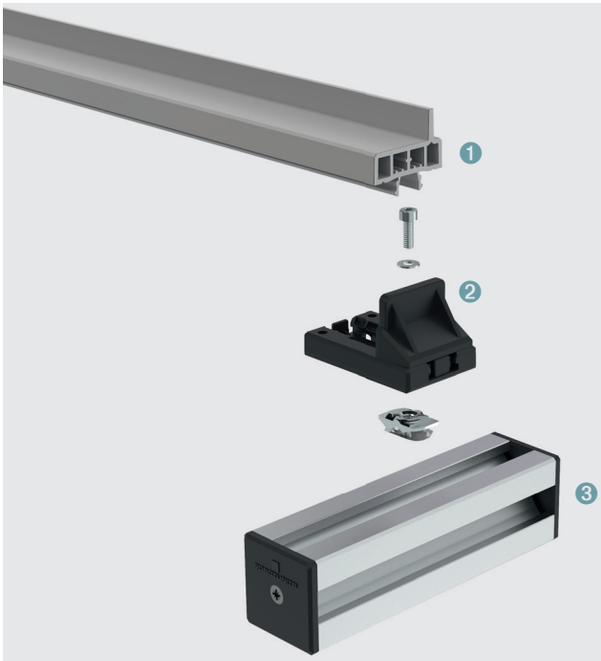

1. Sliding Rail With Side Guide MAL4532 (page 118)
2. Extrusion Adapter ESD Stop Kit MAT4033 (page 120)
3. Extrusion Technology (page 54)

MAL 453_ Sliding Rail

MAL 4530

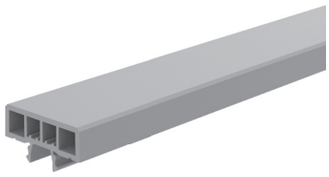

MAL 4532

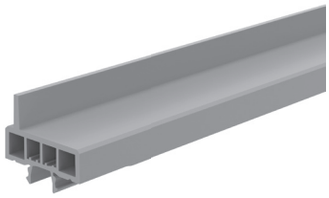

MAL 4534

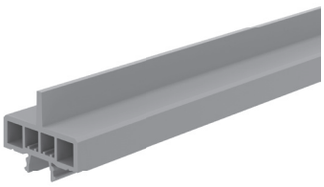

Application

For sliding tracks, e.g. for:

- Manual workstations

Technical Data of Sliding Rail (MAL 4530)

Material: gray PVC-U (antistatic)

Modulus of elasticity E:	3000 N/mm²
Section modulus W_x:	0.5 cm³
Section modulus W_y:	1.6 cm³
Area moment of inertia I_x:	0.6 cm⁴
Area moment of inertia I_y:	2.9 cm⁴
Load m:	1.5 kg

Technical Data of Sliding Rail With Side Guide (MAL 4532)

Material: gray PVC-U (antistatic)

Modulus of elasticity E:	3000 N/mm²
Section modulus W_x:	0.7 cm³
Section modulus W_y:	1.7 cm³
Area moment of inertia I_x:	1.2 cm⁴
Area moment of inertia I_y:	3.4 cm⁴
Load m:	2.5 kg

Technical Data of Sliding Rail With Center Guide (MAL 4534)

Material: gray PVC-U (antistatic)

Modulus of elasticity E:	3000 N/mm²
Section modulus W_x:	0.7 cm³
Section modulus W_y:	1.6 cm³
Area moment of inertia I_x:	1.2 cm⁴
Area moment of inertia I_y:	2.9 cm⁴
Load m:	2.5 kg

Surface resistance per sliding rail
R_S < 100 GΩ

MAL 4530

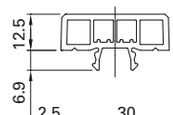

MAL 4532

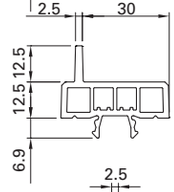

MAL 4534

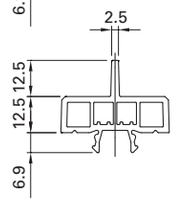

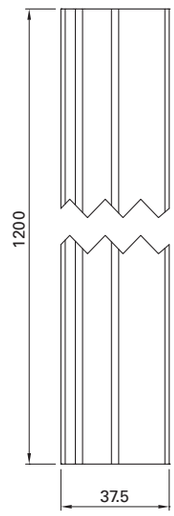

Load

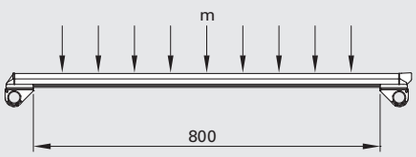

m = Maximum load per 800 mm of sliding rail

Application

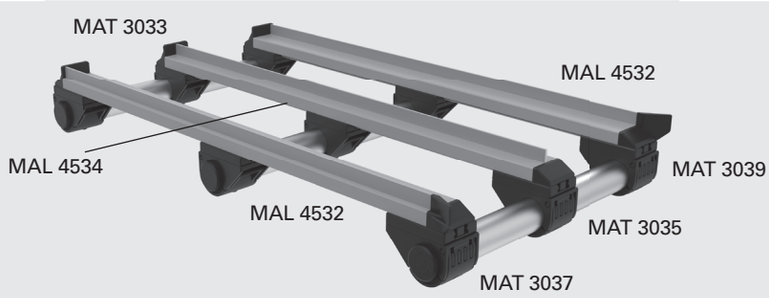

Order Code

Description	Order Code[1] Length	Weight/Meter
Sliding Rail, cut to length	MAL 4530 SNN ____	0.290 kg
Sliding Rail, stock length 1200 mm	MAL 4530 NNN 1200	0.290 kg
Sliding Rail With Side Guide, cut to length	MAL 4532 SNN ____	0.330 kg
Sliding Rail With Side Guide, stock length 1200 mm	MAL 4532 NNN 1200	0.330 kg
Sliding Rail With Center Guide, cut to length	MAL 4534 SNN ____	0.330 kg
Sliding Rail With Center Guide, stock length 1200 mm	MAL 4534 NNN 1200	0.330 kg

1) Please complete the order code by adding the desired length.
Drawing dimensions in mm

MAT 303_ Tube Adapter

MAT 3031

MAT 3033

MAT 3035

MAT 3037

MAT 3039

Application
Adapter to connect the Round Tube to the Sliding Rail

Technical Data
Material: Base part and adapter plate PA6, black (ESD conductive)
Clamping Part PA6, black (ESD conductive) and TPV rubber black
Inserts: PA6, black (ESD conductive)
Conductivity screw: galvanized steel

Surface resistance per Tube Adapter
$R_s < 35\ M\Omega$

ESD Conductivity

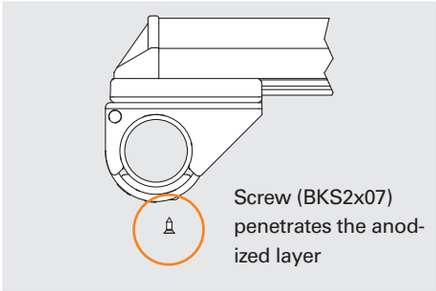

Round Installed Height

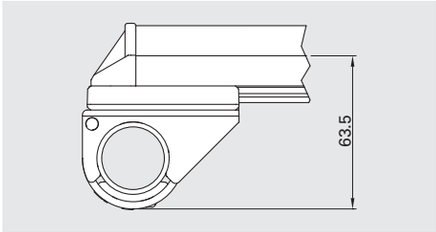

Application

MAT 3031

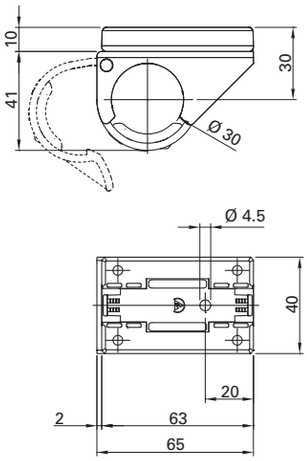

MAT 3033

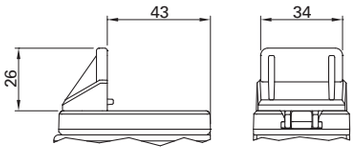

MAT 3035

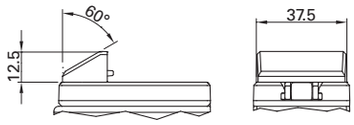

MAT 3037

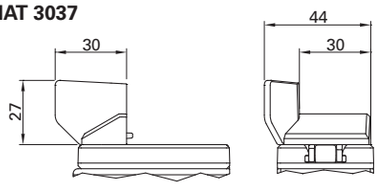

MAT 3039

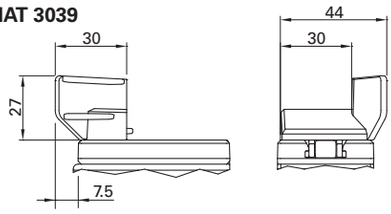

Order Code

	Scope of Delivery					Order Code	
Description	Base Part	Clamping Part	Adapter plate	Insert	BKS 2x07		Weight
Tube Adapter ESD Kit	1	1	1	-	1	MAT 3031	0.054 kg
Tube Adapter ESD Stop Kit	1	1	1	1 (stop)	1	MAT 3033	0.061 kg
Tube Adapter ESD Flat Kit	1	1	1	1 (flat)	1	MAT 3035	0.059 kg
Tube Adapter ESD Left Kit	1	1	1	1 (left)	1	MAT 3037	0.060 kg
Tube Adapter ESD Right Kit	1	1	1	1 (right)	1	MAT 3039	0.060 kg

Drawing dimensions in mm

MAT 403_ Extrusion Adapter

MAT 4031

MAT 4033

MAT 4035

MAT 4037

MAT 4039

Application
Adapter to connect the extrusion to the Sliding Rail

Technical Data
Material: Adapter plate PA6, black (ESD conductive) Inserts: PA6, black (ESD conductive) Fastening material: galvanized steel

Surface resistance per Extrusion Adapter
R_S < 35 MΩ

ESD Conductivity

To attach to the extrusion cut off tabs flush

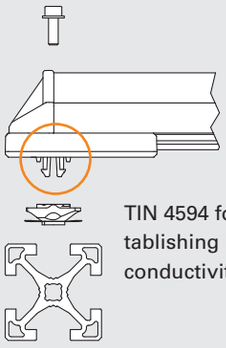

TIN 4594 for establishing ESD conductivity

Round Installed Height

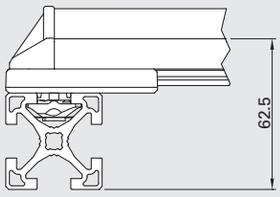

Application

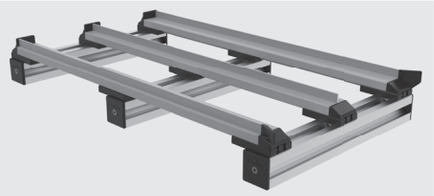

MAT 4031

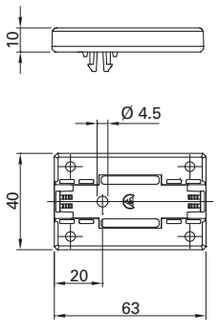

MAT 4033

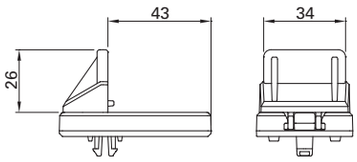

MAT 4035

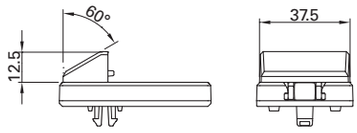

MAT 4037

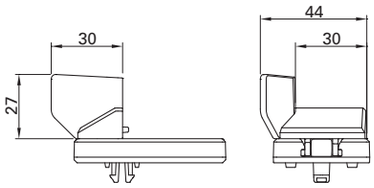

MAT 4039

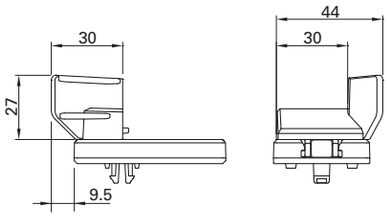

Order Code

	Scope of Delivery					Order Code	
Description	Adapter plate	Insert	SKS M04x012	BLS M004	TIN 4594		Weight
Extrusion Adapter ESD Kit	1	-	1	1	1	MAT 4031	0.027 kg
Extrusion Adapter ESD Stop Kit	1	1 (stop)	1	1	1	MAT 4033	0.034 kg
Extrusion Adapter ESD Flat Kit	1	1 (flat)	1	1	1	MAT 4035	0.032 kg
Extrusion Adapter ESD Left Kit	1	1 (left)	1	1	1	MAT 4037	0.033 kg
Extrusion Adapter ESD Right Kit	1	1 (right)	1	1	1	MAT 4039	0.033 kg

Drawing dimensions in mm

MAT 903_ Adapter

MAT 9031

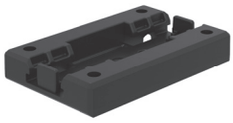

MAT 9033

MAT 9035

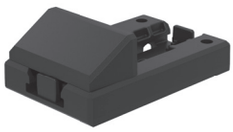

MAT 9037

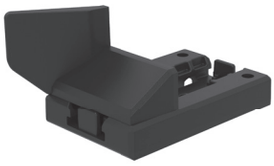

MAT 9039

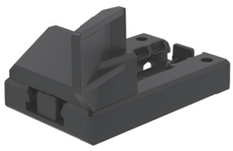

Application
Connector for fastening the Sliding Rail for protruding sections or partitioned Sliding Rails

Technical Data
Material: Adapter plate PA6, black (ESD conductive)
Inserts: PA6, black (ESD conductive)
Fastening material: galvanized steel

Surface resistance per Adapter
$R_s < 35\ M\Omega$

Round Protrusion

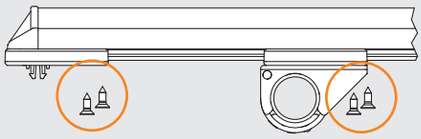

SSS 4x10 for fastening the sliding rails

Square Protrusion

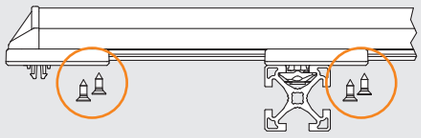

SSS 4x10 for fastening the sliding rails

Partitioning

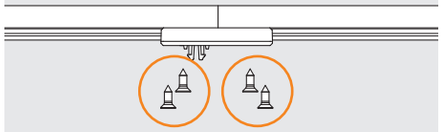

SSS 4x10 for fastening the sliding rails

MAT 9031

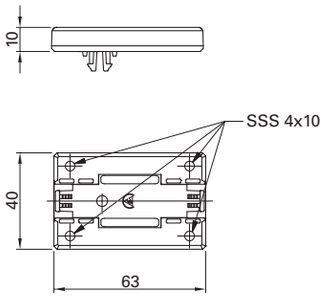

MAT 9033

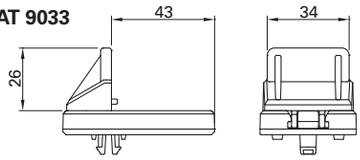

MAT 9035

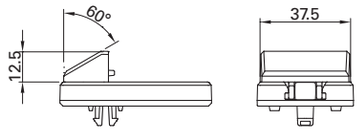

MAT 9037

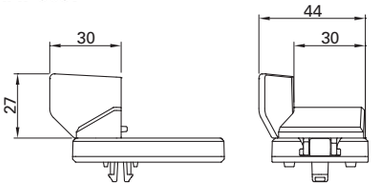

MAT 9039

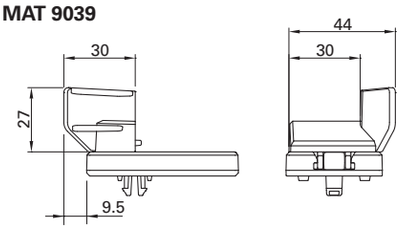

Order Code

Description	Scope of Delivery: Adapter plate	Insert	SSS 4x10	Order Code	Weight
Adapter ESD Kit	1	-	4	MAT 9031	0.017 kg
Adapter ESD Stop Kit	1	1 (stop)	4	MAT 9033	0.024 kg
Adapter ESD Flat Kit	1	1 (flat)	4	MAT 9035	0.022 kg
Adapter ESD Left Kit	1	1 (left)	4	MAT 9037	0.023 kg
Adapter ESD Right Kit	1	1 (right)	4	MAT 9039	0.023 kg

Drawing dimensions in mm

PIL 3002 Round Tube 30x2

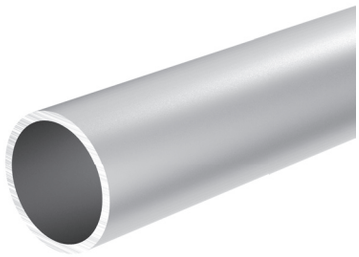

Application
Universally useful, e.g. as
- Material flow technology
- Manual workstations
- In- and out-feed conveyors
- Signage and shelving
- Transport carts
- Table frames

Technical Data
Material: EN AW-6063-T66 clear anodized aluminum

Section modulus	$W_x = W_y$:	1.16 cm^3
Area moment of inertia		
against x + y	$I_x = I_y$:	1.73 cm^4
against torsion	I_t:	3.47 cm^4
Cross sectional area	A:	175.9 mm^2

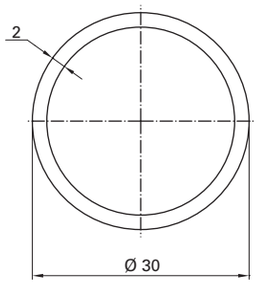

Order Code

Description	Order Code[1] Length	Weight/Meter
Round Tube 30x2, cut to length	PIL 3002 SNN ____	0.475 kg
Round Tube 30x2, stock length 6050 mm (usable length 6000 mm)	PIL 3002 NNN 6050	0.475 kg
Round Tube 30x2, 175 units, stock length 6050 (usable length 6000 mm)	PIL 3002 PAC 0175	0.475 kg

CAP 3002 End Cap For Round Tube 30x2

Application
End Cap for Round Tube

Technical Data
Material: PE, black

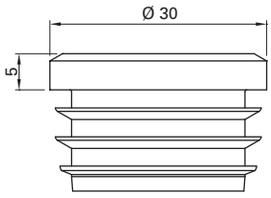

Order Code

Description	Order Code	Weight
End Cap For Round Tube 30x2	CAP 3002	0.004 kg

1) Please complete the order code by adding the desired length.
Drawing dimensions in mm

MAT 3050 Label Holder 50x100

Application
Labels can be inserted into transparent Label Holder
Label Holder can be snapped on directly to RoundTube

Technical Data
Material: PVC transparent

Max. label size 50 x 100 mm

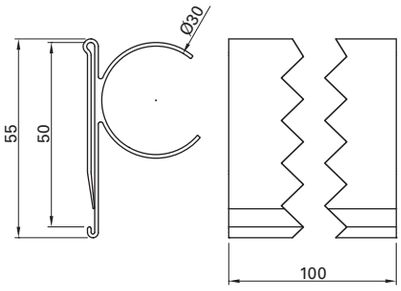

Order Code

Description	Order Code	Weight
Label Holder 50x100	MAT 3050	0.023 kg

Drawing dimensions in mm

MULTIFUNCTIONAL ACCESSORIES

Every small detail has a big impact on the entire system, especially when countless accessories fill hundreds of catalog pages. Developing an accessory for every new application fundamentally contradicts our concept of a World-Class Product Range.

Our accessories are multifunctional and fit not only to an exactly defined component, but to all other components in the entire Modular Automation System.

Cover or fasten
- universally usable Cover or Insert Extrusion
- fits 40 mm and 50 mm extrusions
- suitable for mounting 4 mm to 6 mm thick panels
- covers T-slots and protects against dust and water spray
- suitable for cable routing
- easy to assemble: snap in and go

Everything is possible with a single hinge
- universal hinge fits all applications
- one hinge for all doors
- attachment of non-Robotunits components possible

Fine-tuning and Fastening element
- multifunctional Fine-Tuning and Fastening Element
- form located positioning
- infinitely adjustable
- post-assembly insertion possible

Unique clamping device allows easy attachment of parts
- facilitates mounting of 3 mm to 10 mm thick panels without drilling
- clamping device is quickly mounted by inserting it into the slot
- no drilling of panels required
- parts can be reused
- fits 40 mm and 50 mm extrusions

Safety interlocks: quick and secure installation
- quick and safe installation without the need for additional parts
- fits 40 mm and 50 mm extrusions
- easy to install and adjust
- no drilling or preparing of extrusions needed
- IP65 protection class in accordance with TEC 529

Save time, cut cost
- multifunctional accessories reduce your cost of ordering and your inventory overhead
- standard labeling saves even more time in assembly and storage

Rob_Kat16.1_Inhalt_e_neu_USA.indd 135 10.06.20 14:48

Multifunctional Accessories

Conveyor Technology Accessories

Page 138

Power Supply 400V
CCL 00__

P. 138

Speed Controller
CCN 0004

P. 139

Power Supply 24V
SUL 2000

P. 139

Connection Hub
COP 4501

P. 140

Splined Shaft
COL 8500
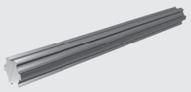
P. 141

Tilt Plate 80
Tilt Plate 80 Bent
TIN 4561/TIN 4571

P. 150

Connection Shaft
with Couplings
COL 52_0

P. 173

Fine-Tuning and
Fixing Element
TIN 4501

P. 176

Safety Fence Floor
Bracket
BAP 205_

P. 182

Anchor Bolt
BAP 2900

P. 182

Leveling Bases
BAS ____

P. 184

Castors
CAS ____

P. 186

Safety Fence Accessories

Page 142

Weld Mesh
PAN ____

P. 142

Panel
PAN ____

P. 142

Weld Mesh Clip
SSP 4520

P. 143

Mesh Retainer
SSP 4515

P. 143

Clamping Device
PIN 452_
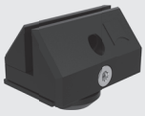
P. 144

Panel Profile
CAL 451_

P. 145

90° Corner Piece
CAN 4501

P. 146

270° Corner Piece
CAN 4503

P. 147

Safety Fence
Fastener
TIN 4511

P. 148

90° Safety Fence
Fastener
TIN 4521

P. 149

Bolt
SSP 4900

P. 152

Screw Retainer
Screw
SSP 5500

P. 152

Handle
DOR 4501

P. 153

Magnet Holder
DOR 4541

P. 153

Door Latch
DOR 4551

P. 154

Door Catch
DOR 4553

P. 155

Door Stop
DOR 4555

P. 156

Safety Slide
DOR 4557

P. 156

Hinge
DOR 4511

P. 157

Safety Interlock
DOR 4580

P. 158

Guiderail
DOL 4034
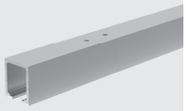
P. 159

Roller Set
DOR 4031
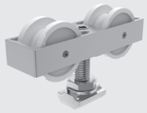
P. 159

Sliding Door Stop
DOR 4032

P. 160

Centering Guide
DOR 4571

P. 160

Slider
DOR 4573
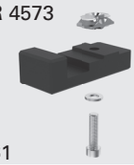
P. 161

Door Support
Castor
DOR 456_

P. 162

Floor Catch
DOR 4561

P. 163

Safety Fence Floor
Bracket
BAP 205_

P. 182

Anchor Bolt
BAP 2900

P. 182

Linear Motion System Accessories

Page 164

Timing Belt Pulley LIN 5400 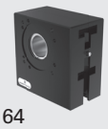 P. 164

Timing Belt LIL 3008 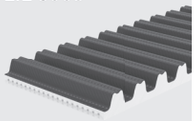 P. 165

Timing Belt Clamp LIN 3221 P. 165

Idlers LIN 50__ 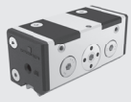 P. 166

Wrench LIN 9990 P. 167

Guiderail LIL 5000 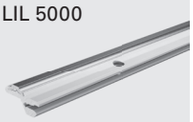 P. 167

Carriage Plate LIN 1501 / 2001 P. 168

Limit Stop LIN 5191 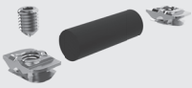 P. 168

Proximity Switch Bracket LIN 8201 P. 169

Proximity Switch LIN 8310 P. 169

Angle Plug with Cable LIN 8312 P. 169

Motor Flange LIN 5241 P. 170

Coupling LIN 523_ 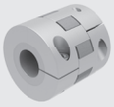 P. 170

Driveshaft/Encoder Shaft LIN 52__ 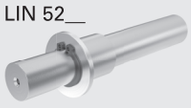 P. 171

Expanding Coupling LIN 5246 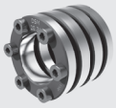 P. 172

Encoder LIN 7501 P. 172

Connection Shaft with Coupling COL 5240 P. 173

General Modular Accessories

Page 173

Connection Shaft with Couplings COL 52_0 P. 173

Cover Extrusion for PIL 4012 CAL 4012 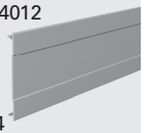 P. 174

End Cap CAP____ P. 175

Cable Block PIN 4530 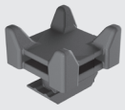 P. 175

Plastic Hook PIN 4590 P. 176

Fine-Tuning and Fixing Element TIN 4501 P. 176

Linear Slider LIN 404 _/LIN 505_ 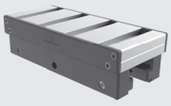 P. 177

Cover/Insert Extrusion CAL 45_ _ 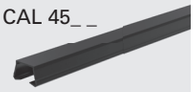 P. 178

T-Slot Sliding Rail CAL 4540 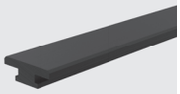 P. 179

Aluminum Cover Extrusion CAL 4545 P. 179

Anti-Slip Profile CAL 4560 P. 180

Gasket CAL 4565 P. 181

Safety Fence Floor Bracket BAP 205_ P. 182

Anchor Bolt BAP 2900 P. 182

Base and Transport Plates BAP ____ 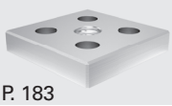 P. 183

Leveling Bases BAS ____ P. 184

Castors CAS ____ P. 186

Allen Key for Hex Socket Head Cap Screws EQL 1001_ P. 188

1/4" Hex Bit with Ball End EQL 1005_ P. 189

CCL 00__ Power Supply 400V

European version

Power supply type may vary by country / region

Application
Power supply with rotary switch for switching the conveyor on and off

Technical Data
Input voltage: 400 VAC
Input frequency: 50/60 Hz
Power output: 0,12 - 0,75 kW
IP rating: IP55

Scope of delivery: Housing with power switch incl. CEE plug incl. phase inverter, power cable and connecting cable to the conveyor

Completely wired when ordering with conveyor, otherwise 3 m cable with flying leads

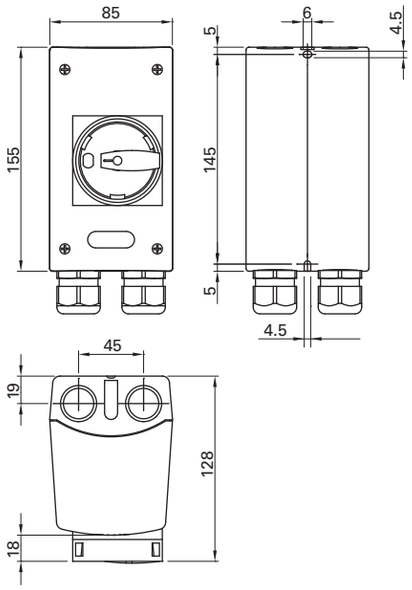

Order Code

Description	Order Code[1] Length	Weight
Power Supply 400V (engine power 0,12 kW)	CCL 0012 SNN ____	0,8 kg + 0,2 kg/m power cable
Power Supply 400V (engine power 0,18 kW)	CCL 0018 SNN ____	0,8 kg + 0,2 kg/m power cable
Power Supply 400V (engine power 0,25 kW)	CCL 0025 SNN ____	0,9 kg + 0,2 kg/m power cable
Power Supply 400V (engine power 0,37 kW)	CCL 0037 SNN ____	0,9 kg + 0,2 kg/m power cable
Power Supply 400V (engine power 0,55 kW)	CCL 0055 SNN ____	0,9 kg + 0,2 kg/m power cable
Power Supply 400V (engine power 0,75 kW)	CCL 0075 SNN ____	0,9 kg + 0,2 kg/m power cable

CCN 0004 Speed Controller

European version

Speed Controller type may vary by country / region

Application
Variable frequency drive for controlling motor speed

Technical Data
Input voltage: 230 or 400 VAC
Input frequency: 50/60 Hz
Power output: 0.75 kW
IP rating: IP66

Scope of delivery: Speed Controller un-wired or Controller with CEE oder SCHUKO plug, power cable and connecting cable to the conveyor

Completely wired when ordering with conveyor, otherwise 3 m cable with flying leads

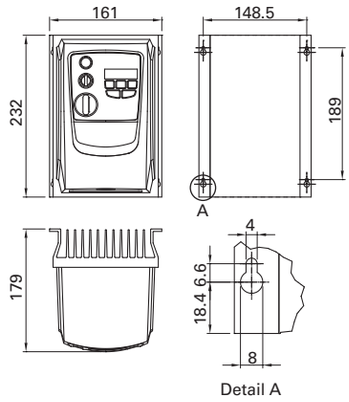

Order Code

Description	Order Code[1] Length	Weight
Speed Controller (not wired)	CCN 0004	2,300 kg
Speed Controller with SCHUKO plug (wired)	CCL 0005 SNN ____	2,4 kg + 0,2 kg/m power cable
Speed Controller with CEE plug (wired)	CCL 0006 SNN ____	2,5 kg + 0,2 kg/m power cable

SUL 2000 Power Supply 24V

European version

Power Supply type may vary by country / region

Application
Power supply with rotary switch for switching the conveyor on and off

A maximum of 12 motor rollers may be connected to one power supply.

Technical Data
Housing material: powder-coated RAL 7035
Operating voltage: 400 VAC
Power frequency: 50 Hz
Control voltage: 24 VDC
Power rating: 10 A
Connected load: 6.9 kW
IP rating: IP54

Scope of delivery: Power Supply 24V with CEE plug, power cable and connection cable to the conveyor

Completely wired when ordering with conveyor, otherwise 3 m cable with open end

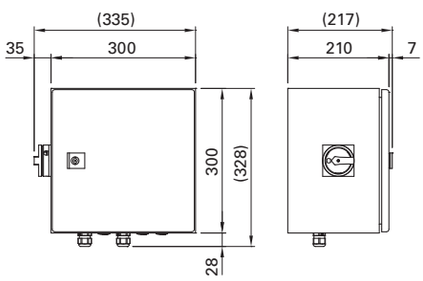

Back view

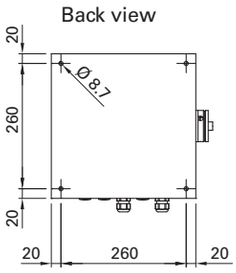

Order Code

Description	Order Code[1] Length	Weight
Power Supply 24V	SUL 2000 SNN ____	10 kg + 0.2 kg/m power cable connection

1) Please complete the order code by adding the desired length of the power supply cable connection.
Drawing dimensions in mm

COP 4501 Connection Hub

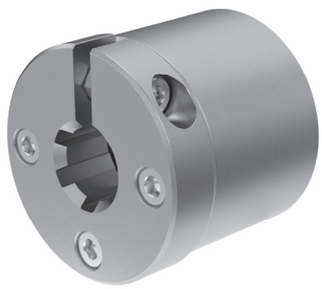

Application
For connecting adjustable timing belt conveyors

Technical Data
Max. torque: 60 Nm

Scope of Delivery
1 C8T Splined Shaft Clamping Ring
1 C8T Connection Hub
1 Expanding Coupling LIN 5246
3 screws IBM M05x016

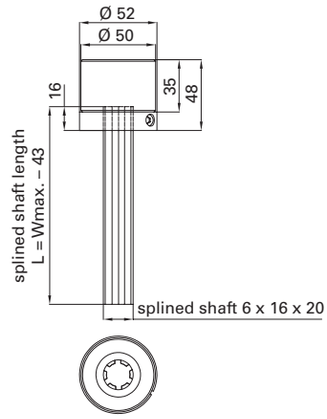

Adjustable Drive Dimensions

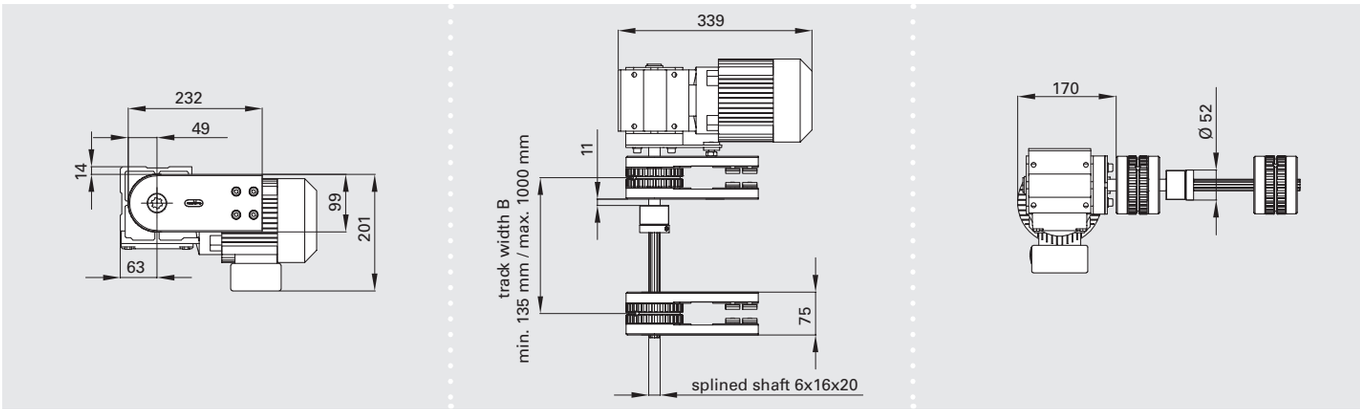

Order Code

Description	Order Code	Weight
Connection Hub Kit	COP 4501	0.550 kg

COL 8500 Splined Shaft

Application
For connecting adjustable timing belt conveyors

Technical Data
Max. torque: 60 Nm

Scope of Delivery
1 Splined Shaft, DIN-ISO 14 - 6x16x20

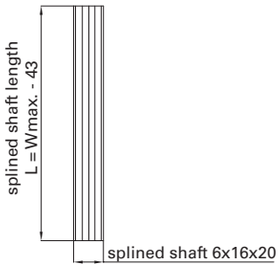

Order Code

Description	Order Code[1] Length	Weight
Splined Shaft	COL 8500 SNN _ _ _ _	1.930 kg/m

1) Please complete the order code by adding the desired length.
Drawing dimensions in mm

PAN ____ Weld Mesh

Application
Used for Safety Fencing

Fastening:
- Weld Mesh Clip SSP 4520
- Safety Fence Mesh Retainer SSP 4515

Technical Data
Material: galvanized steel

Design tip:
Standard widths and lengths offer an outstanding price/performance ratio and quick delivery.

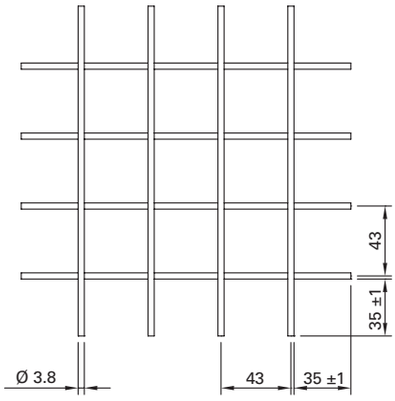

Order Code

Description	Order Code[1]				Weight
		Width	Type	Length	
Weld Mesh, 40x40x4 mm standard	PAN	0461	S4N	1966	3.952 kg
Weld Mesh, 40x40x4 mm standard	PAN	0719	S4N	1966	6.163 kg
Weld Mesh, 40x40x4 mm standard	PAN	0977	S4N	1966	8.375 kg
Weld Mesh, 40x40x4 mm standard	PAN	1450	S4N	1966	12.429 kg
Weld Mesh, 40x40x4 mm	PAN	____	S4N	____	4.360 kg/m²

PAN ____ Panels

Application
Used for Safety Fencing

Fastening:
- Clamping Device PIN 4521
- Cover/Insert Extrusion CAL 4500, CAL 4504, CAL 4510
- Panel Profile CAL 4515, CAL 4517,
- Corner Piece CAN 4501, CAN 4503

Technical Data
Material: Polycarbonate glass or expanded PVC sheets, gray

Order Code

Description	Strength	Order Code[1]				Weight/m²
			Width	Type	Length	
Clear Polycarbonate Glass	4 mm	PAN	____	P4N	____	4.800 kg
Clear Polycarbonate Glass	5 mm	PAN	____	P5N	____	6.000 kg
Clear Polycarbonate Glass	6 mm	PAN	____	P6N	____	7.200 kg
Tinted Polycarbonate Glass	4 mm	PAN	____	Q4N	____	4.800 kg
Tinted Polycarbonate Glass	5 mm	PAN	____	Q5N	____	6.000 kg
Tinted Polycarbonate Glass	6 mm	PAN	____	Q6N	____	7.200 kg
Expanded PVC Panel, gray, similar to RAL 7004	5 mm	PAN	____	G5N	____	3.250 kg

1) Please complete the order code by adding the desired width and length.
Drawing dimensions in mm

SSP 4520 Weld Mesh Clip

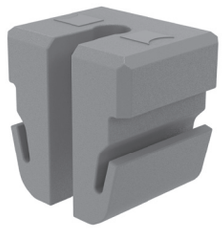

Application
For form-located integration of Weld Mesh panels into an extrusion frame

Technical Data
Material: PA6 V0
Color: RAL 7004 (signal gray)

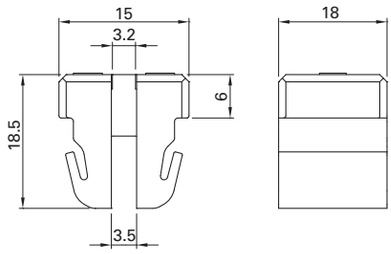

Assembly

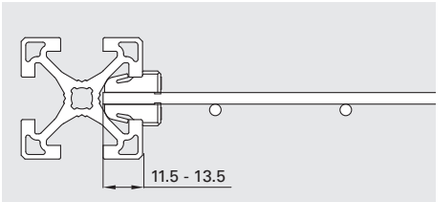

Order Code

Description	Order Code	Weight
Weld Mesh Clip	SSP 4520	0.005 kg

SSP 4515 Mesh Retainer

Transfer resistance per conductive connection: 0.4 mΩ

Application
For form-located integration of Weld Mesh panels into an extrusion frame
- Electrically conductive connection between weld mesh panels and extrusion frame
- can be used with non-standard spacing

Technical Data
Material: steel

Scope of Delivery
1 Mesh Retainer SSP 4514
1 Set Screw GST M08x025 (waxed)

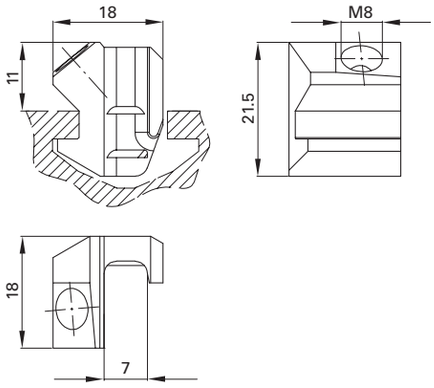

Assembly

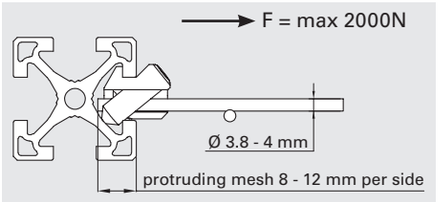

Order Code

Description	Order Code	Weight
Mesh Retainer Kit	SSP 4515	0.025 kg

1) Please complete the order code by adding the desired width and length.
Drawing dimensions in mm

PIN 452_ Clamping Device

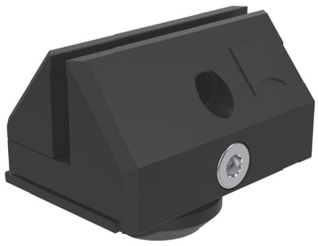

Application
For attaching panels to extrusions, usable with 40 mm and 50 mm series extrusions
- As standard, panels do not need to be drilled
- High retention force

Technical Data
Material: PA6, black, galvanized steel
Load: up to 250 N, perpendicular to slot
Centerline: 1 - 10 mm
Protection against inadvertent movement of panels through pre-tensioning of clamps

Retention Force
Without pin: 200 N
With pin (SPS 5x20): 1500 N
(Polycarbonate glass)

Scope of Delivery
1 PIN Clamping Device Base Part
1 PIN Clamping Device Sliding Part
1 screw IBS M04x25
1 Screw Retainer

Panel size
inside width minus 15 mm

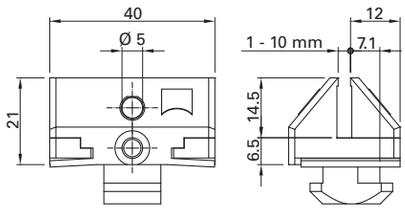

Screw Retainer

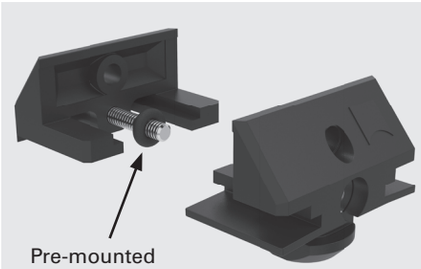

Assembly

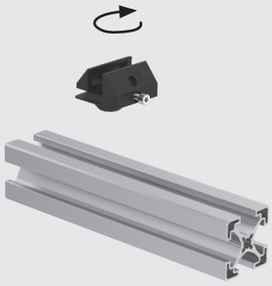

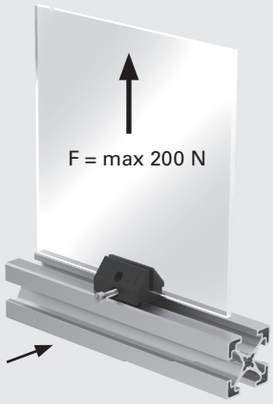

Pin as an option for very high retention force

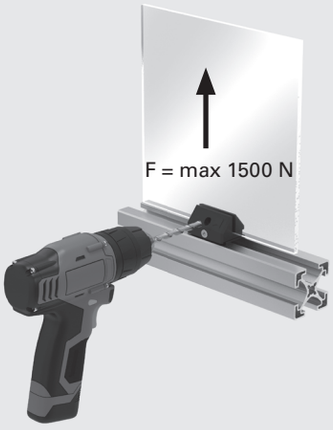

Drill
Ø 5.1 mm
Fit pin (SPS 5x20)

Number of clamping devices

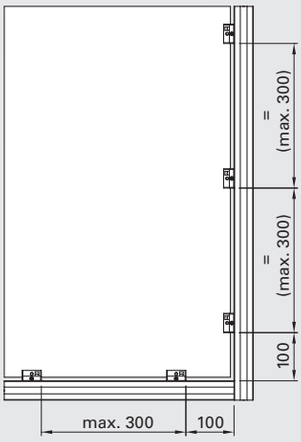

Order Code

Description	Order Code	Weight
Clamping Device Kit	PIN 4521	0.021 kg
Pin	SPS 5x20	0.002 kg

1) Please complete the order code by adding the desired length.
Drawing dimensions in mm

CAL 451_ Panel Profile

Application
For fastening of panels between 1 - 3 mm and 3.1 - 6 mm thick, also suitable for later installation
- Adequate protection against dust, water spray and noise
- Appealing design

Technical Data
Material: impact-resistant PVC with soft lip, RAL 7004 (signal gray), UV-resistant, silicone-free
Temperature range: -10°C to +60°C
Stock length: 3000 mm

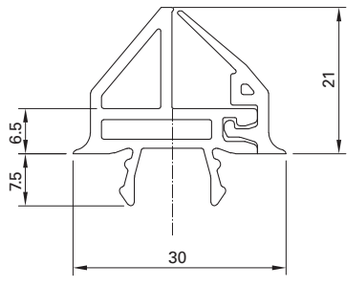

Assembly

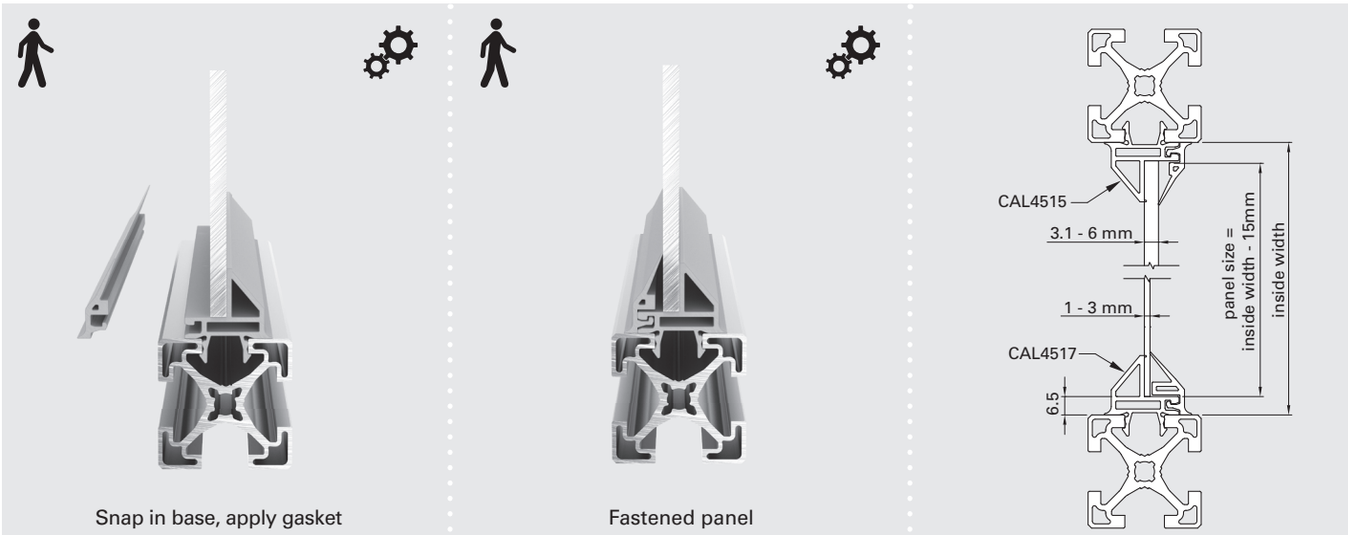

Snap in base, apply gasket

Fastened panel

Length Calculation

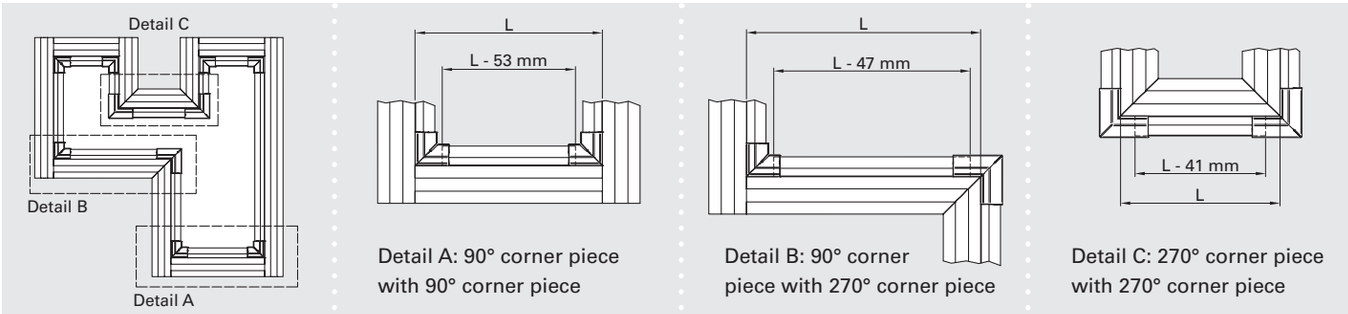

Detail A: 90° corner piece with 90° corner piece

Detail B: 90° corner piece with 270° corner piece

Detail C: 270° corner piece with 270° corner piece

Order Code

Description	Order Code[1] Length	Weight/Meter
Panel Profile, 3.1 - 6 mm, cut to length	CAL 4515 SNN ____	0.280 kg
Panel Profile, 3.1 - 6 mm, stock length: 3000 mm	CAL 4515 NNN 3000	0.280 kg
Panel Profile, 3.1 - 6 mm, 25 rods, stock length: 3000 mm	CAL 4515 PAC 0025	0.280 kg
Panel Profile, 1 - 3 mm, cut to length	CAL 4517 SNN ____	0.280 kg
Panel Profile, 1 - 3 mm, stock length: 3000 mm	CAL 4517 NNN 3000	0.280 kg
Panel Profile, 1 - 3 mm, 25 rods, stock length: 3000 mm	CAL 4517 PAC 0025	0.280 kg

CAN 4501 90° Corner Piece

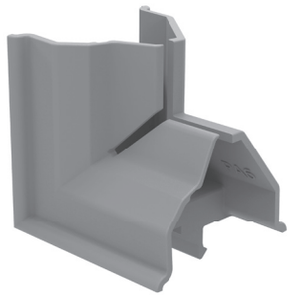

Application
Used as 90° corner trim for Panel Profiles CAL 4515 and CAL 4517

Technical Data
Material: POM, UV-resistant, silicone-free
Color: RAL 7004 (signal gray)
Temperature Range: -10 °C to +60 °C

Scope of Delivery
1 90° Corner Piece Base Part
1 90° Corner Piece Top Part

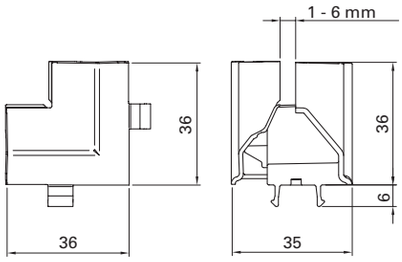

Assembly

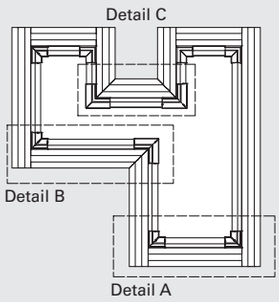

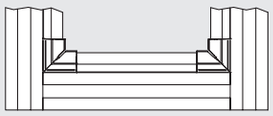

Detail A: 90° corner piece with 90° corner piece

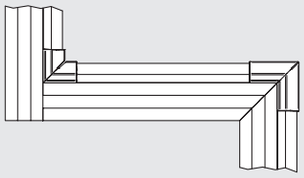

Detail B: 90° corner piece with 270° corner piece

Order Code

Description	Order Code	Weight
90° Corner Piece Kit	CAN 4501	0.010 kg

Drawing dimensions in mm

CAN 4503 270° Corner Piece

Application
Used as 270° corner trim for Panel Profiles CAL 4515 and CAL 4517

Technical Data
Material: PA6, UV-resistant, silicone-free
Color: RAL 7004 (signal gray)
Temperature Range: -10 °C to +60 °C

Scope of Delivery
1 270° Corner Piece Base Part
1 270° Corner Piece Top Part

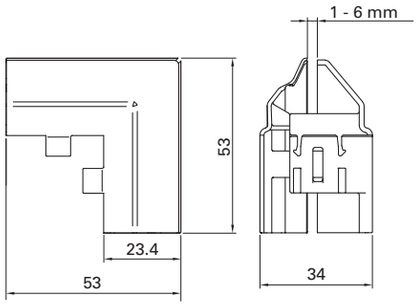

A 45° miter cut of the extrusion is necessary if the 270° corner piece is to be used.

Assembly

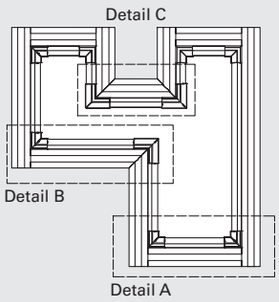

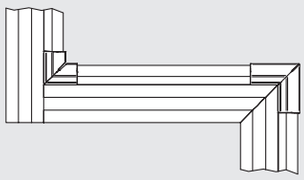

Detail B: 90° corner piece with 270° corner piece

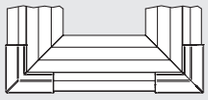

Detail C: 270° corner piece with 270° corner piece

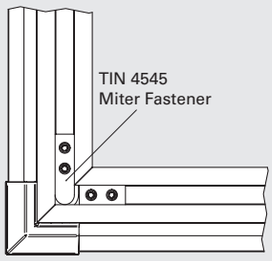

45° miter cut

Order Code

Description	Order Code	Weight
270° Corner Piece Kit	CAN 4503	0.012 kg

Drawing dimensions in mm

TIN 4511 Safety Fence Fastener

Application
For variable fastening options of safety fence components
- 90° connections of extrusions and as end cap
- Strong connection between panels

Technical Data
Material: galvanized steel

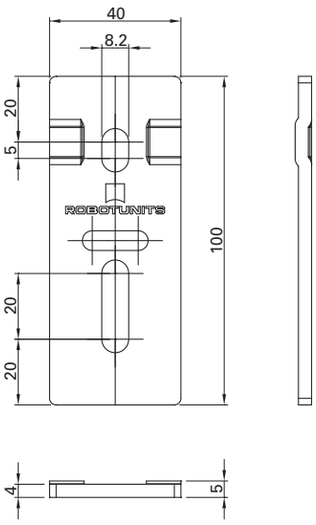

Assembly

Sturdy connection between panels

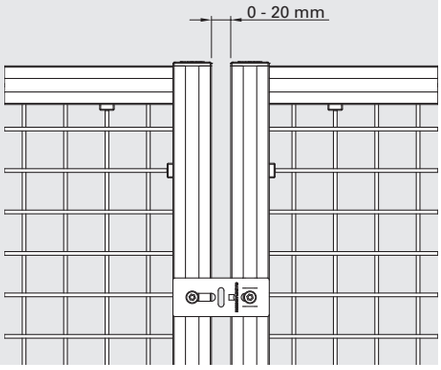

Order Code

Description	Scope of Delivery TIN 4510	TIN 4598	IBS M08x016NIKO	Order Code	Weight
Safety Fence Fastener Kit	1	2	2	TIN 4511[1]	0.150 kg
Safety Fence Fastener Kit	1	2	2	TIN 4511CP[2]	0.150 kg

1) Packaged in Kit
2) Packaged by type, available for an order quantity of 100 or more
Drawing dimensions in mm

TIN 4521 90° Safety Fence Fastener

Application
For variable fastening options of safety fence components
- 90° connections of extrusions and as end cap
- Strong connection between panels
- Adjustable corner brackets from 0° to 180°

Technical Data
Material: galvanized steel

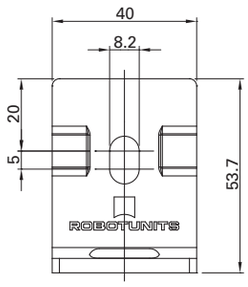

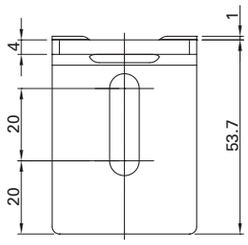

Assembly

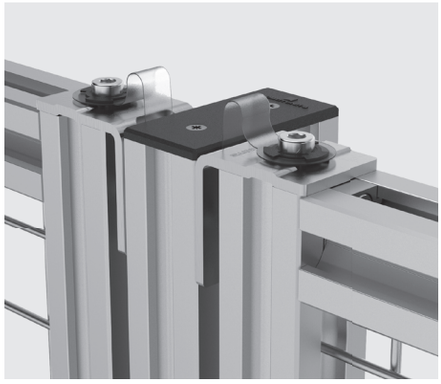

Order Code

Description	Scope of Delivery TIN 4520	TIN 4598	IBS M08x016NIKO	Order Code	Weight
90° Safety Fence Fastener Kit	1	2	2	TIN 4521[1]	0.150 kg
90° Safety Fence Fastener Kit	1	2	2	TIN 4521CP[2]	0.150 kg

1) Packaged in Kit
2) Packaged by type, available for an order quantity of 100 or more
Drawing dimensions in mm

TIN 4561 Tilt Plate 80

Application
Variable connection of modular components
- Sturdy connection of conveyor and stand
- Infinitely adjustable incline

Technical Data
Material: galvanized steel

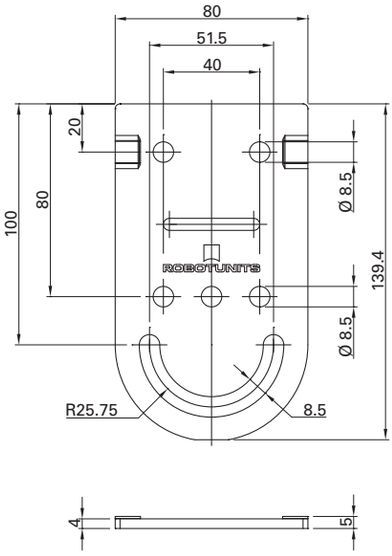

Application

Connection of conveyor and stand

Possible inclination settings

40 mm series

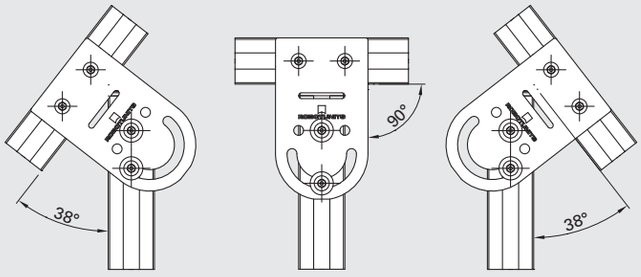

80 mm series

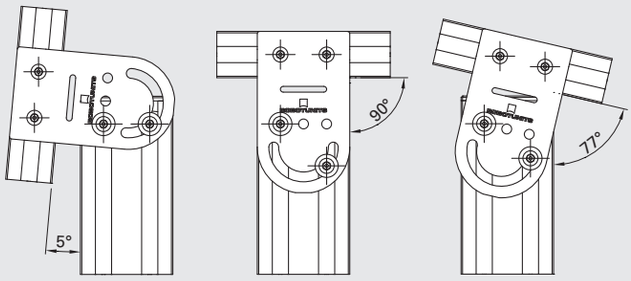

Order Code

	Scope of Delivery				Order Code	
Description	TIN 4530	TIN 4508	IBS M08x016NIKO	BLS M008S02		Weight
Tilt Plate 80 Kit	1	4	4	2	TIN 4561	0.370 kg

Drawing dimensions in mm

TIN 4571 Tilt Plate 80 Bent

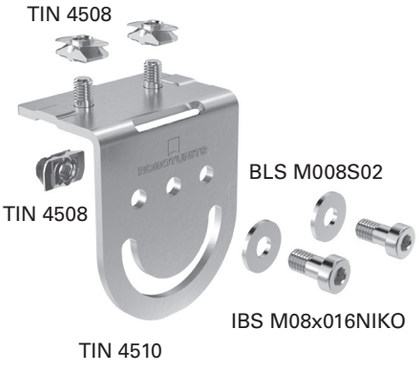

Application
Variable connection of modular components
- Workplace applications e.g. for shelves
- Infinitely adjustable incline (Bracket as with TIN 4531)

Technical Data
Material: galvanized steel

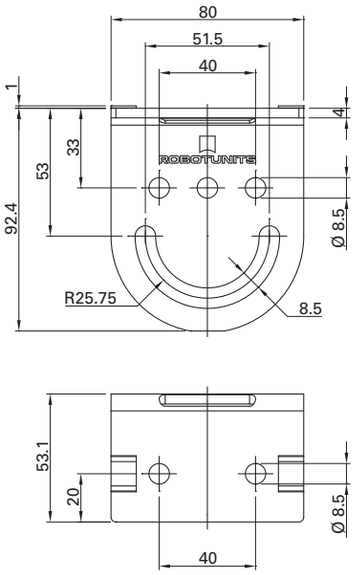

Application

Workstation

Order Code

	Scope of Delivery				Order Code	
Description	TIN 4540	TIN 4508	IBS M08x016NIKO	BLS M008S02		Weight
Tilt Plate 80 Bent Kit	1	4	4	2	TIN 4571	0.370 kg

Drawing dimensions in mm

SSP 4900 Bolt

Application
For mounting Allround Panels

Technical Data
Material: nitrated steel

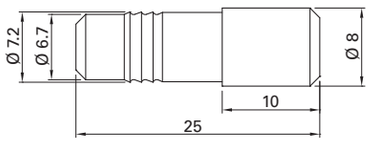

Function

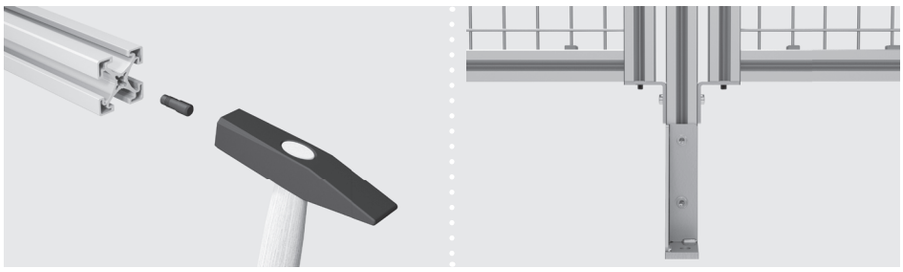

Order Code

Description	Order Code	Weight
Bolt	SSP 4900	0.010 kg

SSP 5500 Screw Retainer

Application
For securing M8 retaining screws
(e.g. for Allround Panel)

Technical Data
Material: PVC and PA

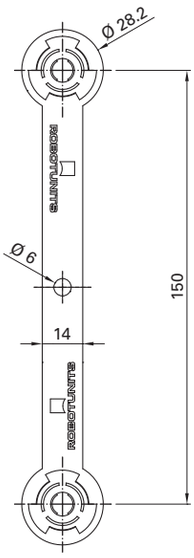

Application

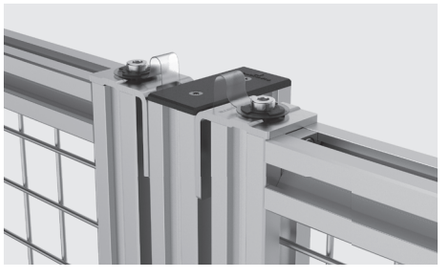

Order Code

Description	Order Code	Weight
Screw Retainer	SSP 5500	0.001 kg

Drawing dimensions in mm

DOR 4501 Handle

Application
For use with doors, panels, carts etc.

Technical Data
Material: PA/GF composite, galvanized steel

Retention Force

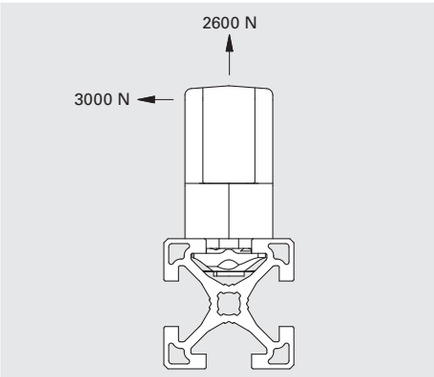

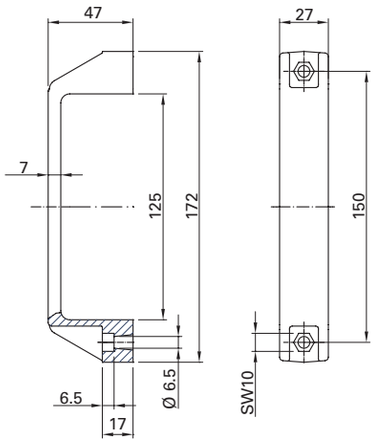

Order Code

Description	Scope of Delivery DOR 4500	TIN 4506	IBS M06x020	Order Code	Weight
Handle Kit	1	2	2	DOR 4501	0.100 kg

DOR 4541 Magnet Holder

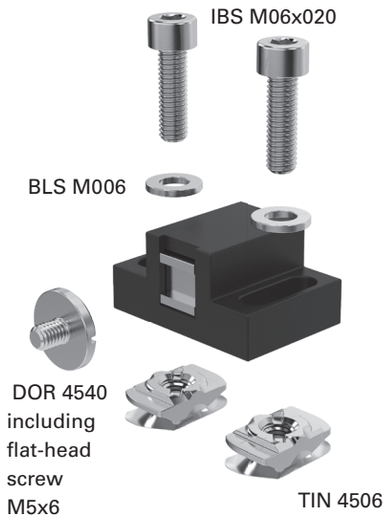

Retention Force: front 20 N, back 8 N

Application
Closing device for frameless doors

Technical Data
Material: POM composite, black, galvanized steel

Application

Swinging door

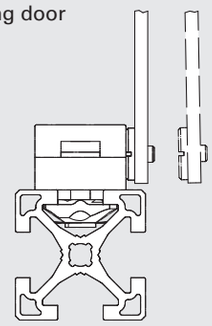

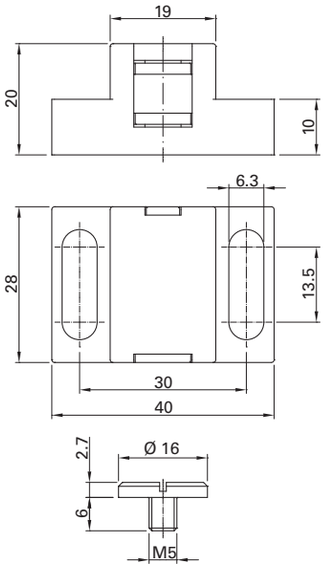

Order Code

Description	Scope of Delivery DOR 4540	TIN 4506	IBS M06x020	BLS M006	Order Code	Weight
Magnet Holder Kit	1	2	2	2	DOR 4541	0.075 kg

DOR 4551 Door Latch

DOR 4550

TIN 4506

Application
To latch door panels directly to door posts. Door can only be opened by pushing the door latch. Suitable for 40 mm and 50 mm series extrusions.

Technical Data
Material: PA6 30 GF, black, galvanized steel

For extra security.

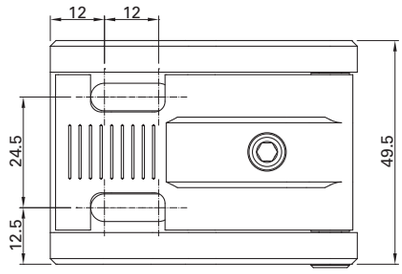

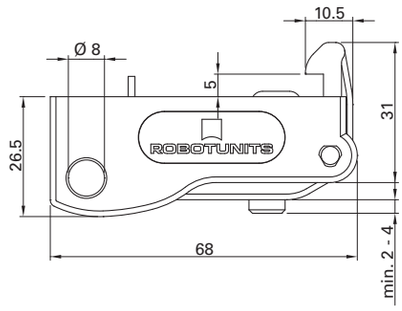

Application

Secure: Push latch to open door.

Door latch can be **secured with a padlock against inadvertent opening**. Lock bolt diameter: 7 mm

Door latch can be **secured with a padlock against inadvertent closing**. Lock bolt diameter: 7 mm

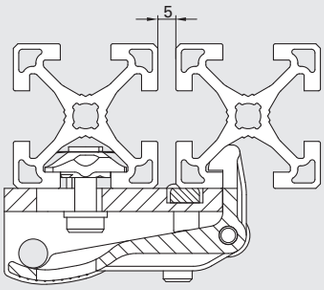

Application: door latch in 40 mm series

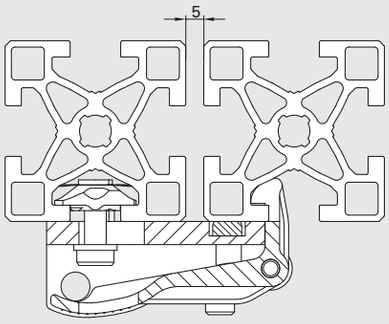

Application: door latch in 50 mm series

Adjustable pre-tension for optimal retention force. Set screw must always protrude by at least 2 mm.

Order Code

Description	Scope of Delivery DOR 4550	Scope of Delivery TIN 4506	Order Code	Weight
Door Latch Kit	1	2	DOR 4551	0.100 kg

Drawing dimensions in mm

DOR 4553 Door Catch

DOR 4552

TIN 4506

Application
To latch door panels directly to door posts. Door can be opened by pulling door handle. Suitable for 40 mm and 50 mm series extrusions.

Technical Data
Material: PA6 30 GF, black, galvanized steel

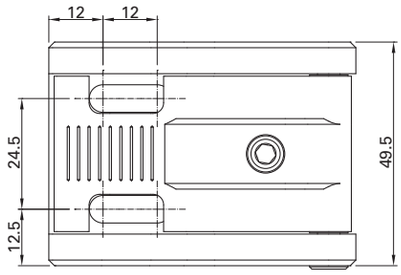

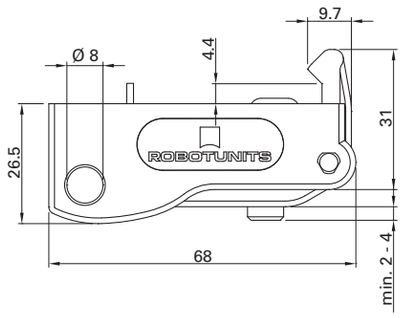

Application

Pull to release and open.

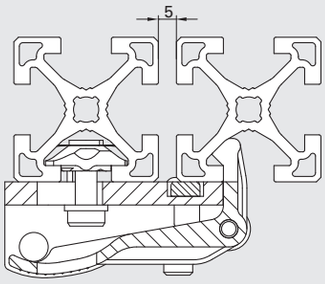

Application of door latch in 40 mm series

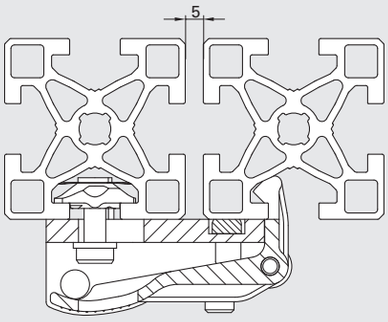

Application of door latch in 50 mm series

Adjustable pre-tension for optimal retention force. Set screw must always protrude by at least 2 mm.

Order Code

Description	Scope of Delivery DOR 4552	Scope of Delivery TIN 4506	Order Code	Weight
Door Catch Kit	1	2	DOR 4553	0.100 kg

Drawing dimensions in mm

DOR 4555 Door Stop

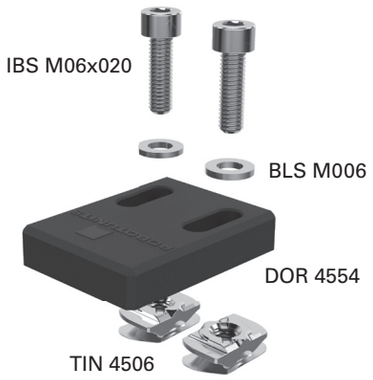

Application
Used as a fixed door stop

Technical Data
Material: PA6 30 GK, galvanized steel

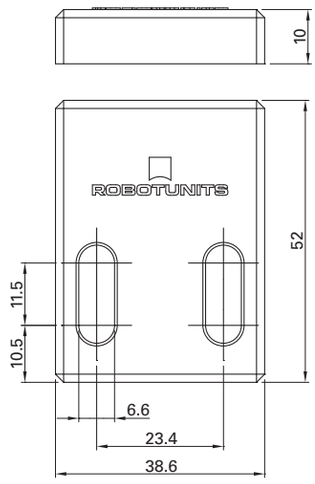

Order Code

Description	Scope of Delivery: DOR 4554	TIN 4506	IBS M06x020	BLS M006	Order Code	Weight
Door Stop Kit	1	2	2	2	DOR 4555	0.020 kg

DOR 4557 Safety Slide

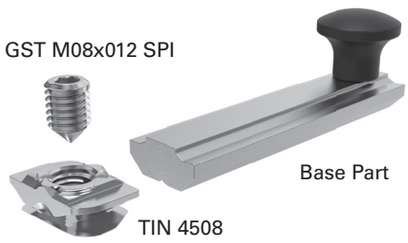

Application
Prevents inadvertent closing of doors. Suitable for 40 mm and 50 mm series extrusions.

Technical Data
Material: galvanized steel; Duroplast

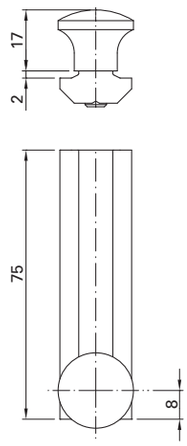

Application

Door is open:

Door is closed: Safety slide sits on the door latch. Safety slide falls down onto the drop-in nut and prevents the door from being inadvertently closed.

Door will be closed:
To close the door, the safety slide must be manually lifted.

Order Code

Description	Scope of Delivery: Base Part	TIN 4508	GST M08x012 SPI	Order Code	Weight
Safety Slide Kit	1	1	1	DOR 4557	0.090 kg

Drawing dimensions in mm

DOR 4511 Hinge

Application
For hinged structures. Inserts allow for use with 40 mm and 50 mm series extrusions.

Technical Data
Material: GD-Zn black, coated, galvanized steel

Tightening torque
IBS M06x016NIKO = 9 Nm

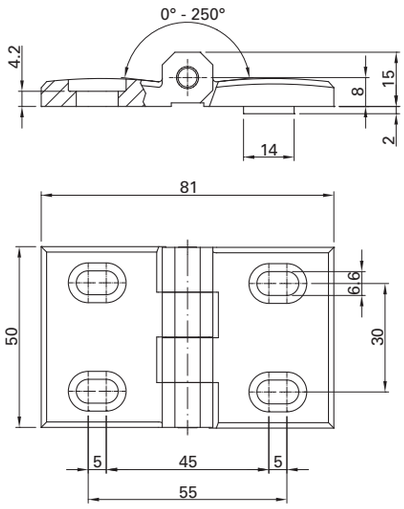

Assembly

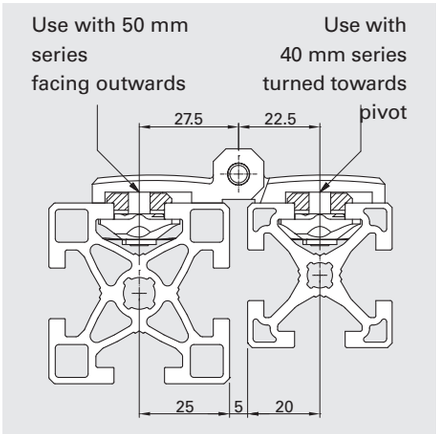

Order Code

Description	Scope of Delivery DOR 4510	TIN 4506	IBS M06x016NIKO	Order Code	Weight
Hinge Kit	1	4	4	DOR 4511	0.222 kg

Drawing dimensions in mm

DOR 458_ Safety Interlock

Safety Interlock with actuator and ball retainer

Safety interlock with actuator

Fastening Kit B: PIL 5010 and PIL 5050

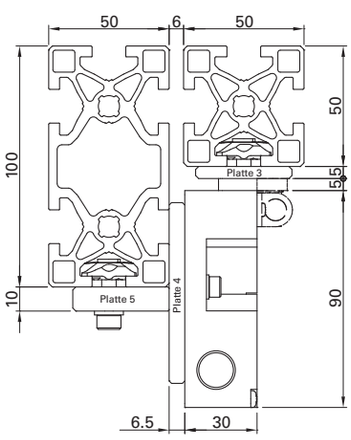

Application
Safety device for doors

Technical Data
Material: clear, anodized aluminum, galvanized steel, housing of fiberglass-reinforced Thermopolus (-30 to +80°C)

Voltage:
230V/2 A,
1 x N/C contact, 1 x N/O contact

Regulations:
IEC 60947-5-1, EN 60947-5-1
DIN VDE 0660-200, BG-GS-ET-15

Scope of Delivery
DOR 4580:
1 Base Part
1 Actuator

DOR 4582:
1 Base Part
1 Actuator
1 Ball Retainer

DOR 4581 (Fastening Kit A):
1 Mounting Plate 1
1 Mounting Plate 2
4 Drop-in Nuts TIN 4506
2 Washers BLS M005
2 Screws IBS M05x014
2 Screws SKS M05x010
2 Screws SKS M06x016
2 Screws SKS M06x020

DOR 4583 (Fastening Kit B):
1 Mounting Plate 3
1 Mounting Plate 4
1 Mounting Plate 5
4 Drop-in Nuts TIN 4506
2 Washers BLS M005
2 Washers BLS M006
2 Screws SKS M05x010
2 Screws IBS M05x016
4 Screws SKS M06x016
2 Screws IBS M06x020

Additional attachment options for Fastening Kit B DOR 4583:
PIL 40 x 40 with PIL 50 x 100
PIL 50 x 50 with PIL 40 x 80

Fastening Kit A: PIL 4040 and PIL 4040

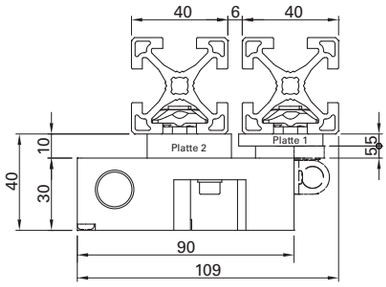

Fastening Kit A: PIL 5050 and PIL 4040

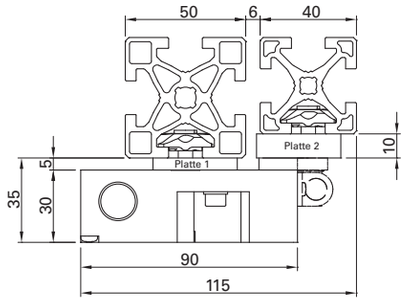

Fastening Kit A: PIL 5050 and PIL 5050

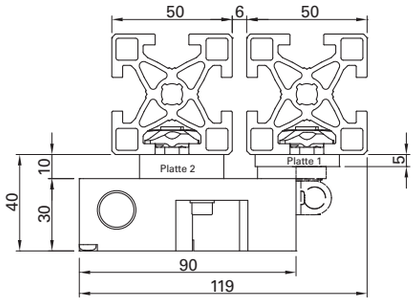

Fastening Kit B: PIL 4080 and PIL 4040

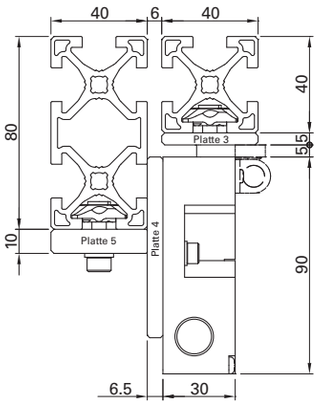

Order Code

Description	Order Code	Weight
Safety Interlock with Actuator	DOR 4580	0.125 kg
Safety Interlock with actuator and ball retainer	DOR 4582	0.160 kg
Fastening Kit A	DOR 4581	0.155 kg
Fastening Kit B	DOR 4583	0.230 kg

DOL 4034 Guiderail

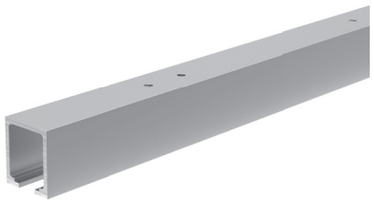

Application
For sliding doors

Technical Data
Material: clear anodized aluminum

Hole spacing = 220 mm
Max. load = 80 kg per sliding door

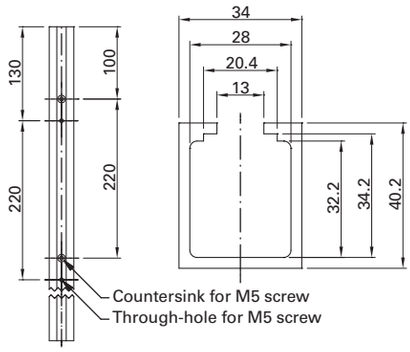

Order Code

Description	Order Code[1] Length	Weight/Meter
Guiderail	DOL 4034 SNN _ _ _ _	0.996 kg
Guiderail of maximum standard length (approx. 6050 mm)	DOL 4034 NNN 6050	0.996 kg

DOR 4031 Roller

Application
Sliding Door

Technical Data
Material: clear anodized aluminum,
PA6 white, galvanized steel

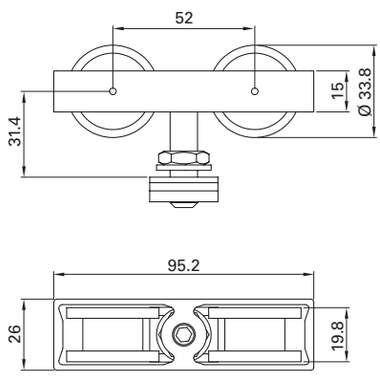

Order Code

Description	Scope of Delivery DOR 4030	TIN 6010	SKM M10FLA	GST M10x050	BLS M010	Order Code	Weight
Roller Kit	1	1	1	1	1	DOR 4031	0.140 kg

1) Please complete the order code by adding the desired length.
Drawing dimensions in mm

DOR 4032 Sliding Door Stop

Application
Mechanical stop and retainer for sliding door

Technical Data
Material: aluminum, galvanized steel, rubber

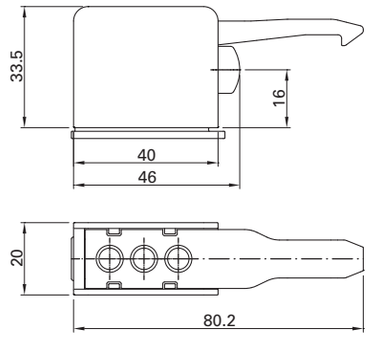

Application

Rubber stop with retention spring

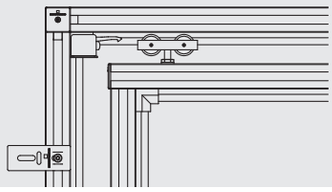

Order Code

Description	Order Code	Weight
Sliding Door Stop	DOR 4032	0.126 kg

DOR 4571 Centering Guide

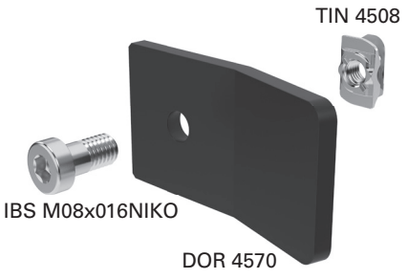

Application
For sliding doors

Technical Data
Material: powder-coated steel

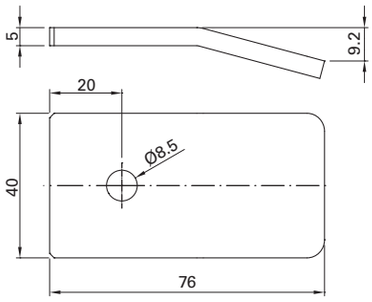

Order Code

Description	Scope of Delivery			Order Code	Weight
	DOR 4570	TIN 4508	IBS M08x016NIKO		
Centering Guide Kit	1	1	1	DOR 4571	0.100 kg

DOR 4573 Slider

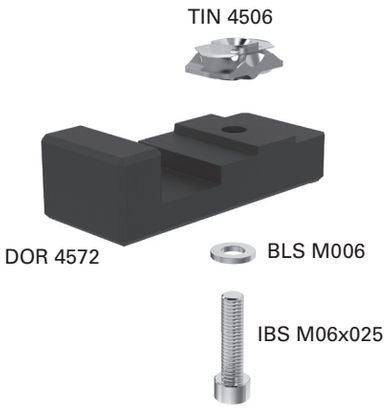

Application
For sliding doors

Technical Data
Material: black POM composite

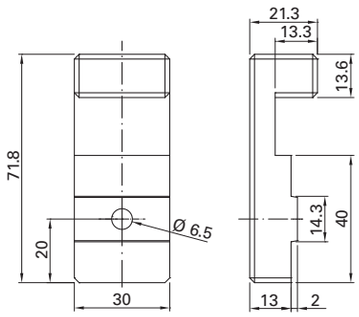

Order Code

	Scope of Delivery				Order Code	
Description	DOR 4572	TIN 4506	IBS M06x025	BLS M006		Weight
Slider Kit	1	1	1	1	DOR 4573	0.060 kg

Drawing dimensions in mm

DOR 456_ Door Support Castor

Door Support Castor Kit, rigid

Door Support Castor Kit, swivel

Application
Rolling support for panels, doors

Technical Data
Material: clear anodized aluminum, galvanized steel, rubber

Scope of Delivery
Door Support Castor Kit, rigid
DOR 4565:
1 Rigid Castor with Bolt Hole Fitting CAS 2082
1 Bracket for Support Castor
1screw IBS M10x020
2 Washers BLS M010
1 Hexagon Nut SKM M10
2 Screws IBS M08x016NIKO
2 Drop-in Nuts TIN 4508
2 Washers BLS M008

Door Support Castor Kit, swivel
DOR 4567:
1 Swivel Castor with Bolt Hole Fitting CAS 2080
1 Bracket for Support Castor
1 screw IBS M10x030
2 Washers BLS M010
1 Hexagon Nut SKM M10
2 Screws IBS M08x016NIKO
2 Drop-in Nuts TIN 4508
2 Washers BLS M008

Door Support Castor Kit, rigid

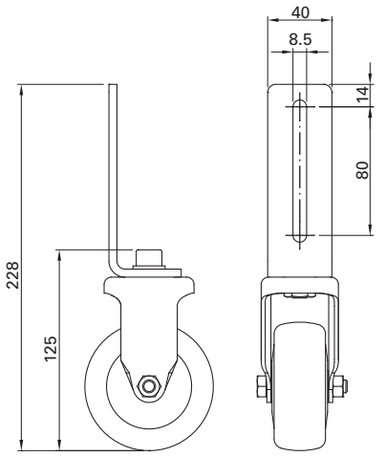

Door Support Castor Kit, swivel

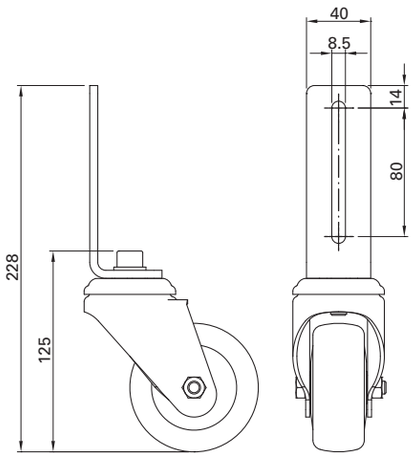

Order Code

Description	Order Code	Weight
Door Support Castor Kit, rigid	DOR 4565	0.510 kg
Door Support Castor Kit, swivel	DOR 4567	0.680 kg

Drawing dimensions in mm

DOR 4561 Floor Catch

Application
For double door

Technical Data
Material: galvanized steel,
PA/GF composite

Scope of Delivery
1 Floor Catch Base Part
1 Handle DOR 4500
2 Screws M06x020
4 Washers BLS M006
1 Spring-Loaded Pressure Part with Band and Hexagon Socket-Head GST M06x015FED

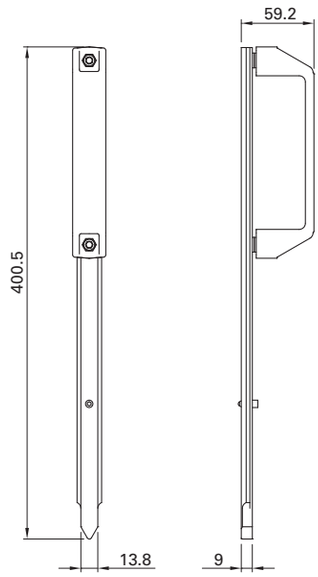

Application

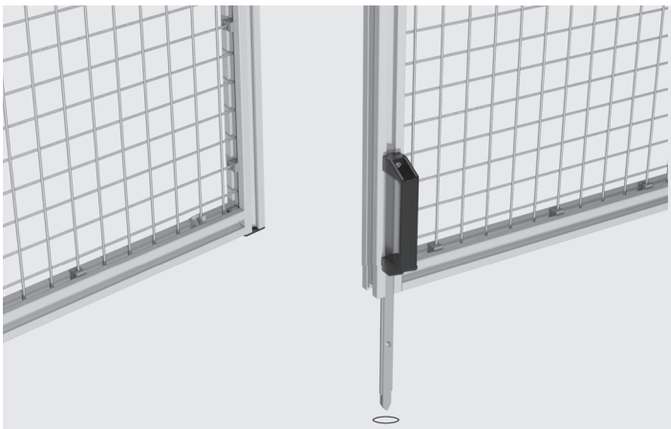

Catch latches into recess in floor. Bore Ø 14 mm

Order Code

Description	Order Code	Weight
Floor Catch Kit	DOR 4561	0.545 kg

Drawing dimensions in mm

LIN 5400 Timing Belt Pulley

Application
Drive and idler pulley for Linear Motion Unit, suitable for 50 mm series extrusions.

Technical Data
Material: black anodized aluminum, steel
Max. drive torque: 60 Nm
Carriage stroke per revolution: 200 mm
Pitch circle diameter: 63.66 mm

Flange plates for motor connection are available upon request.

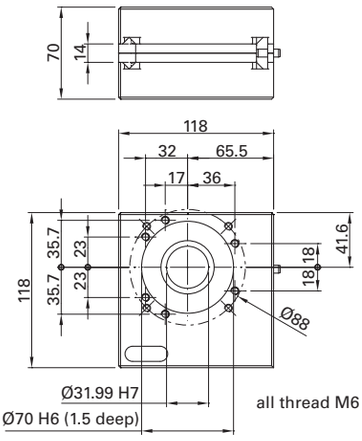

Application

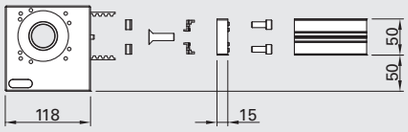

Connection Option LIN 5451
For connecting to extrusions:
50x50, 50x100 flat, 50x200 flat

Scope of Delivery
1 Timing Belt Pulley LIN 5400
1 Fastener 50x50 FAS 5050
2 Centering Inserts FAS 5052
2 Drop-in Nuts TIN 4508
2 Screws IBS M08x020
1 screw IBS M10x035

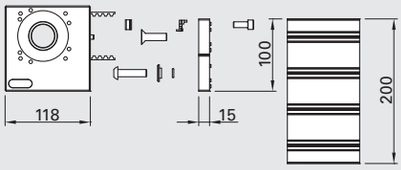

Connection Option LIN 5421
For connecting to extrusions:
50x200 upright

Scope of Delivery
1 Timing Belt Pulley LIN 5400
1 Fastener 50x50 FAS 5050
1 Fastener 50x50 FAS 5050, modified
1 FAS 5052 centering insert
1 Drop-in Nut TIN 4508
1screw IBS M08x020
1 screw IBS M10x035
1 TIN plate for Special Fastener 50 with O-ring and screw LKS M10x040

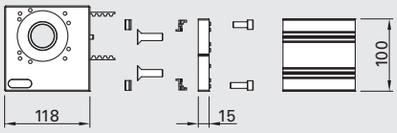

Connection Option LIN 5411
For connecting to extrusions:
50x100 upright, 100x100

Scope of Delivery
1 Timing Belt Pulley LIN 5400
1 Fastener 50x50 FAS 5050
1 Fastener 50x50 FAS 5050, modified
2 Centering Inserts FAS 5052
2 Drop-in Nuts TIN 4508
2 Screws IBS M08x020
2 Screws SKS M10x035

Order Code

Description	Order Code	Weight
Timing Belt Pulley	LIN 5400	1.660 kg
Timing Belt Pulley with Fastening Kit 50	LIN 5451	1.950 kg
Timing Belt Pulley with Fastening Kit 100	LIN 5411	2.000 kg
Timing Belt Pulley with Fastening Kit 200	LIN 5421	2.050 kg

1) Please complete the order code by adding the desired length.
Drawing dimensions in mm

LIL 3008 Timing Belt

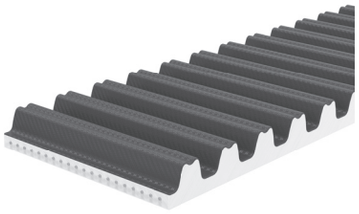

Timing Belt Length Calculation
TL (Total Length), SL (Stroke Length),
L (Timing Belt Length):
L = 2 x TL - 136 or L = 2 x SL + 944

Application
Power transmission from drive to carriage.

Technical Data/Scope of Delivery
Material: PU timing belt, white,
PAZ coating on toothed side,
Max. tensile load: 2000 N
Recommended pre-tension of timing belt: 0.1 % = approx. 500 N pre-tension
Timing Belt designation: RPU-8M-30-PAZ

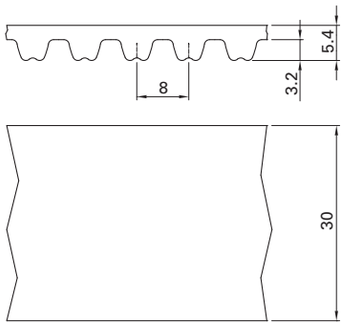

Order Code

Description	Order Code[1] Length	Weight/Meter
Timing Belt RPU-8M-30-PAZ, cut to length	LIL 3008 SNN ____	0.155 kg

LIN 3221 Timing Belt Clamp

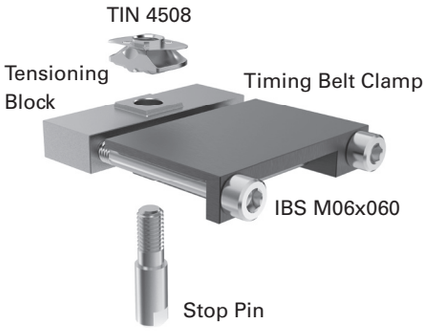

Application
For attaching and tensioning the timing belt

Technical Data
Material: black anodized aluminum, stainless steel, galvanized steel
Max. tensile load: 2000 N

Scope of Delivery
1 Tensioning Block
1 Timing Belt Clamp
1 Stop Pin
4 Timing Belt Pins
2 Screws IBS M06x060
1 Drop-in Nut TIN 4508

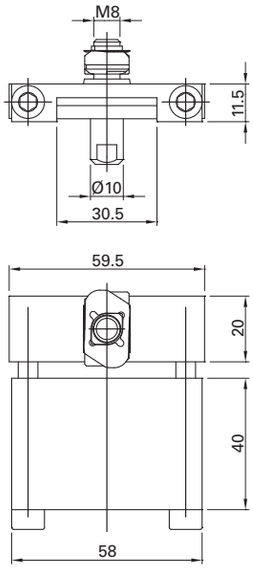

Application

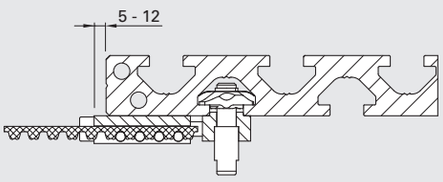

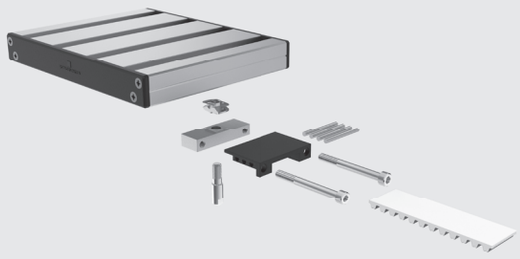

Order Code

Description	Order Code	Weight
Timing Belt Clamp Kit	LIN 3221	0.205 kg

LIN 500_ Single Idler

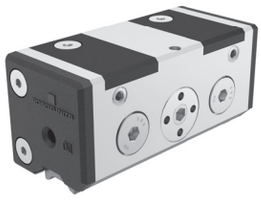

Application
Roller device for Linear Motion Units, integrated felt wipers for cleaning and lubrication.

Technical Data
Material: clear or black anodized aluminum, black, tempered steel or galvanized steel, black PA6 composite, pressed felt

Bearing load capacity per single idler
Radial: max. 1500 N
Axial: max. 750 N

The carriage is adjusted using the eccentric idlers and an eccentric wrench LIN 9990.
Assembly instructions: page 193

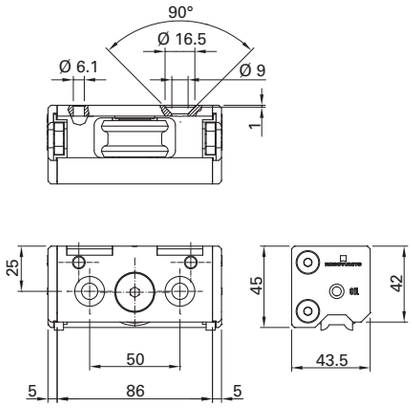

Order Code

Description	Scope of Delivery LIN 5000	LIN 5002	Grooved pin	SKS M08x055	Order Code	Weight
Single Idler Kit, concentric	1		2	2	LIN 5001	0.375 kg
Single Idler Kit, eccentric		1	2	2	LIN 5003	0.375 kg

LIN 501_ Double Idler

Application
Roller device for Linear Motion Units, integrated felt wipers for cleaning and lubrication.

Technical Data
Material: clear or black anodized aluminum, black, tempered steel or galvanized steel, black PA6 composite, pressed felt

Bearing load capacity per double idler
Radial: max. 3000 N
Axial: max. 1500 N

The carriage is adjusted using the eccentric idlers and an eccentric wrench LIN 9990.
Assembly instructions: page 193

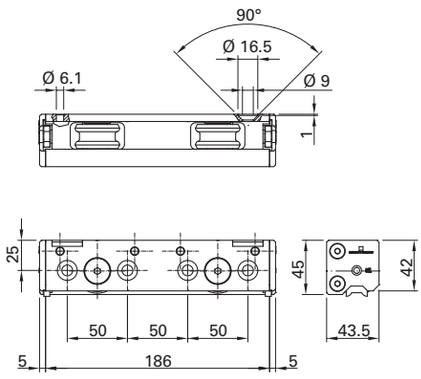

Order Code

Description	Scope of Delivery LIN 5010	LIN 5012	Grooved pin	SKS M08x055	Order Code	Weight
Double Idler Kit, concentric	1		4	4	LIN 5011	0.755 kg
Double Idler Kit, eccentric		1	4	4	LIN 5013	0.755 kg

LIN 9990 Wrench

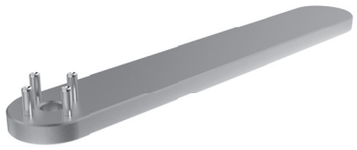

Application
For adjusting and tightening the eccentric bolt of the Idlers

Technical Data
Material: galvanized steel

Order Code

Description	Order Code	Weight
Wrench	LIN 9990	0.177 kg

LIL 5000 Guiderail

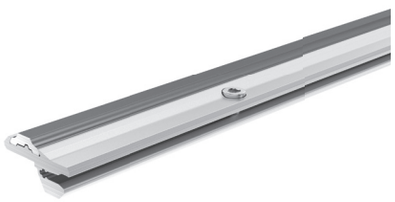

Application
Guide rollers can be added later to any 50 mm series extrusions

Technical Data
Material: tempered, brushed steel
HRC 58 +3, clear anodized aluminum

Scope of Delivery
Guiderail, Rolled Steel
and Aluminum
screw IBS M06x012 NIKO

Tightening torque
IBS M06x012NIKO = 12 Nm

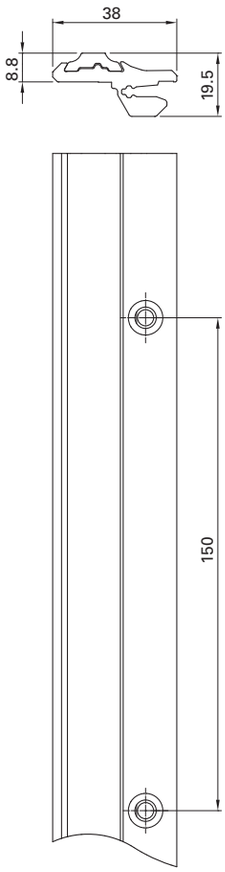

Assembly

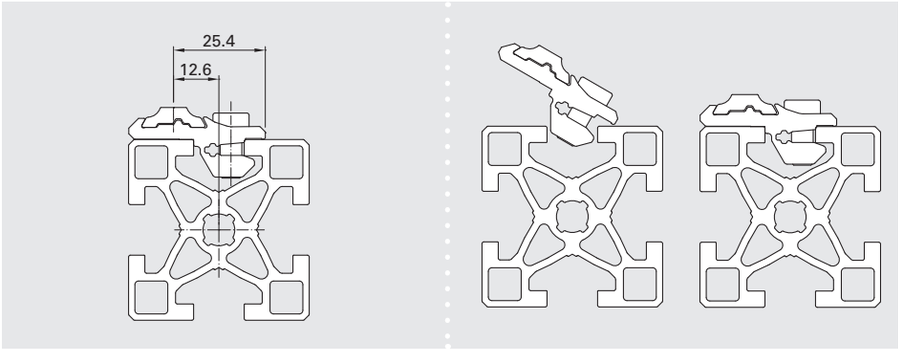

Order Code

Description	Order Code[1] Length	Weight/Meter
Guiderail	LIL 5000 SNN ____	1.105 kg
Guiderail, stock length 6050 mm (usable length 6000 mm)	LIL 5000 NNN 6050	1.105 kg

1) Please complete the order code by adding the desired length.
Drawing dimensions in mm

LIN 1501 / LIN 2001 Carriage Plate

Application
Carriage Plate for mounting components, assembled with Double Idlers

Technical Data
Material: clear anodized aluminum, PA6 black

Scope of Delivery
1 Carriage Plate
2 End Caps CAP 2521

Carriage plate 50 (length 150) = LIL 5010
Carriage plate 100 (length 200) = LIL 1010
Assembly instructions: page 193

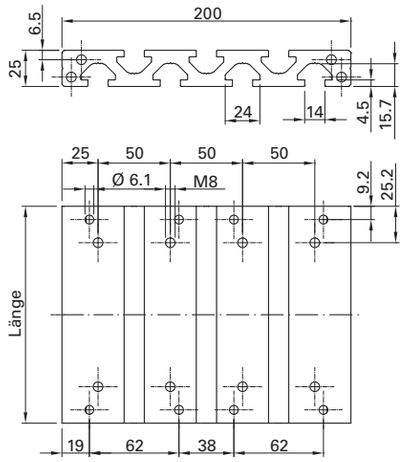

Order Code

Description	Length	Order Code	Weight
Carriage Plate 50 Kit	150 mm	LIN 1501	1.150 kg
Carriage Plate 100 Kit	200 mm	LIN 2001	1.530 kg

LIN 5191 Limit Stop

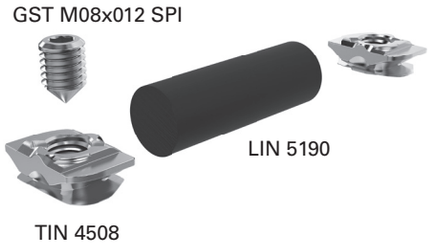

Application
Mechanical end stop, prevents pulley damage

Technical Data/Scope of Delivery
Material: galvanized steel, rubber
Used in combination with LIN 3221 timing belt clamp.

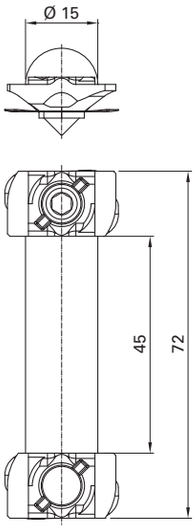

Order Code

Description	Scope of Delivery LIN 5190	TIN 4508	GST M08x012 SPI	Order Code	Weight
Limit Stop Kit	1	2	1	LIN 5191	0.036 kg

Drawing dimensions in mm

LIN 8201 Proximity Switch Bracket

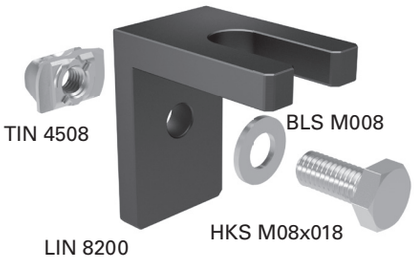

Application
Used for mounting proximity switch; the idler is the switching surface.

Technical Data
Material: black anodized aluminum, galvanized steel

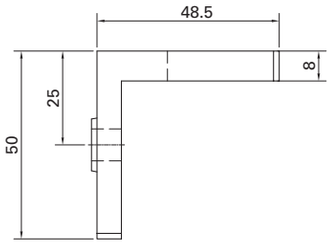

Application

Bracket and proximity switch

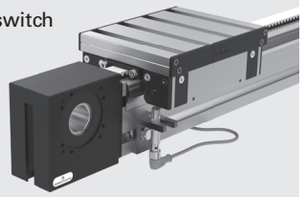

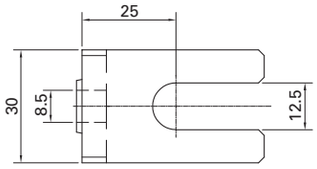

Order Code

Description	Scope of Delivery				Order Code	Weight
	LIN 8200	TIN 4508	HKS M08x018	BLS M008		
Proximity Switch Bracket Kit	1	1	1	1	LIN 8201	0.175 kg

LIN 8310 Proximity Switch

Application
Inductive proximity switch for monitoring the travel limit mounted with Proximity Switch Bracket LIN 8201

Technical Data
Switching distance: 4 mm, 24V DC, PNP N/O contact, outer thread M12x1
Material: galvanized steel

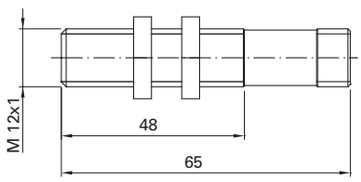

Order Code

Description	Order Code	Weight
Proximity Switch, M12x1	LIN 8310	0.185 kg

LIN 8312 Angle Plug With Cable

Application
Used with Proximity Switch LIN8310 to monitor travel limit

Technical Data
Cable length: 5 m
Head A connection type: socket, M12 4-pin, angled with LED
Head B connection type: loose cable end

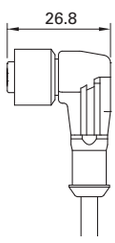

Order Code

Description	Order Code	Weight
Angle Plug With Cable, 5 m	LIN 8312	0.020 kg

LIN 5241 Motor Flange

Application
To attach motor to Timing Belt Pulley

Technical Data
Material: clear anodized aluminum, galvanized steel

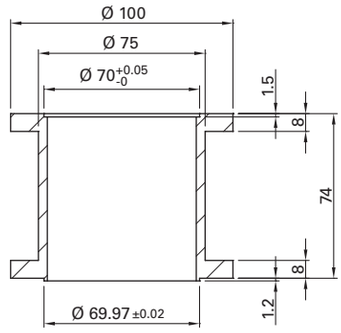

Assembly

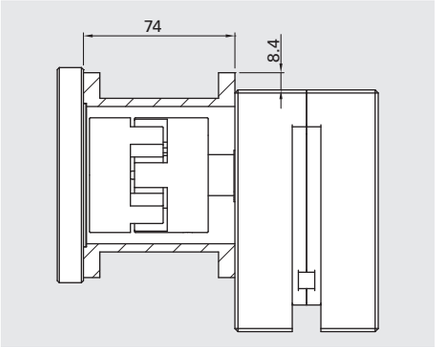

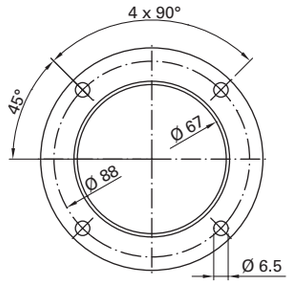

Order Code

Description	Scope of Delivery LIN 5240	IBS M06x20	BLS M006	Order Code	Weight
Motor Flange Kit	1	8	8	LIN 5241	0.390 kg

LIN 523_ Coupling

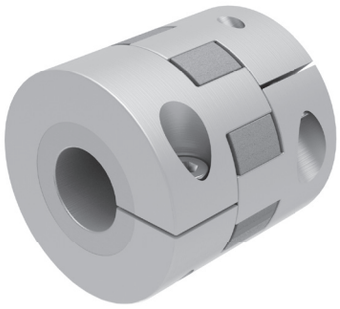

Application
To connect motor to drive shaft

Technical Data
Material: cast aluminum

Transferable torque: 60 Nm
Tightening torque: 15 Nm

Scope of Delivery
LIN 5236:
2 Coupling Halves with Ø 20
1 Coupling Star

LIN 5237:
1 Coupling Half, Ø 10 pre-drilled
1 Coupling Half with Ø 20
1 Coupling Star

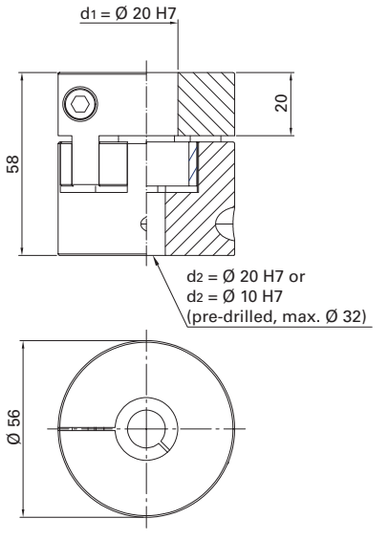

Order Code

Description	Order Code	Weight
Coupling d1 = d2 = 20 mm	LIN 5236	0.360 kg
Coupling d1 = 20 mm, d2 = 10 pre-drilled	LIN 5237	0.360 kg

Drawing dimensions in mm

LIN 52__ Driveshaft/Encoder Shaft

LIN 5253

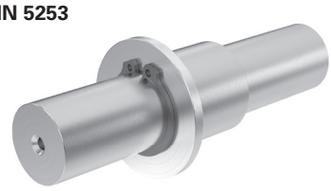

LIN 5255

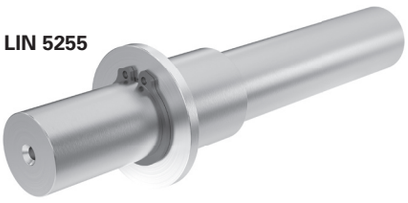

LIN 5248

Application
To connect Coupling to Timing Belt Pulley

Technical Data
Material: stainless steel

Other diameters and lengths possible upon request.

LIN 5253

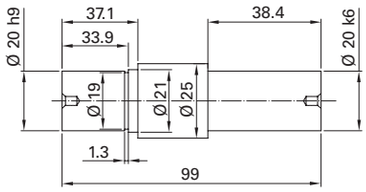

LIN 5255

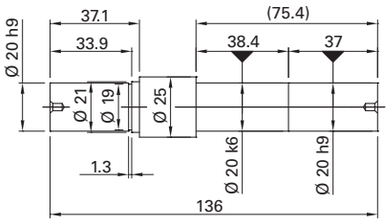

LIN 5248

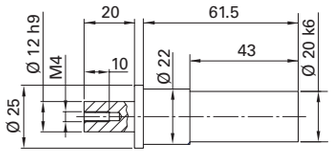

Dimensions

LIN 5253

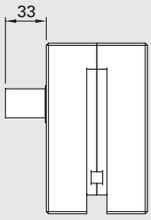

LIN 5255

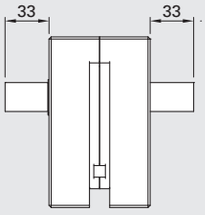

LIN 5248

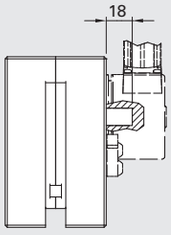

Order Code

	Scope of Delivery					Order Code	
Description	LIN 5252	LIN 5254	LIN 5248	BLS M020	SIR 020x1.2		Weight
Single Drive Shaft Kit	1	-	-	1	1	LIN 5253	0.300 kg
Double Drive Shaft Kit	-	1	-	1	1	LIN 5255	0.400 kg
Encoder Shaft	-	-	1	-	-	LIN 5248	0.190 kg

Drawing dimensions in mm

LIN 5246 Expanding Coupling

Application
To connect motor or drive shaft (diameter = 20 mm) with Timing Belt Pulley

Technical Data
Material: tempered steel

Transmittable torque: 60 Nm
Tightening torque per screw: 2 Nm
Shaft tolerance: k6

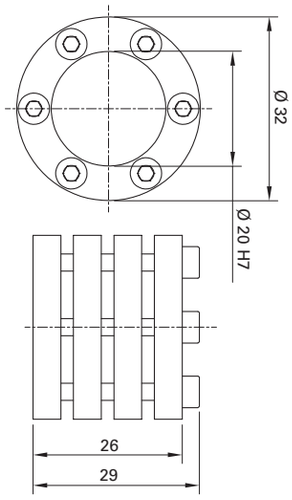

Order Code

Description	Order Code	Weight
Expanding Coupling	LIN 5246	0.070 kg

LIN 750_ Encoder

Application
For fitting to C8T timing belt pulley or LIN timing belt pulley

Technical Data
Material: aluminum housing
Speed: max 4000 rpm
Increments: 2000 increments/rev.
Power requirement: 60 mA (10 VDC)
30 mA (24 VDC)
Supply voltage: 10 to 30 VDC
IP rating: IP64
Output: push/pull

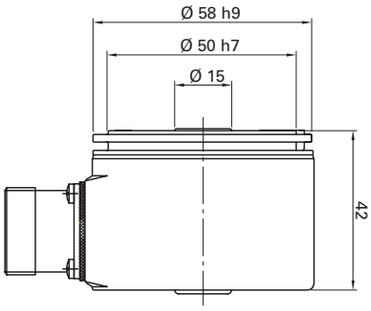

Assembly

Scope of Delivery
Encoder Kit LIN 7501
1 Encoder LIN 7500
including round connector
1 Encoder Shaft LIN 5248
1 Expanding Coupling LIN 5246
1 Torque Arm
2 Screws IBS M06x016 NIKO
1 Clamping Pin SPS 4x12

Encoder LIN 7500
1 Encoder LIN 7500
including round connector

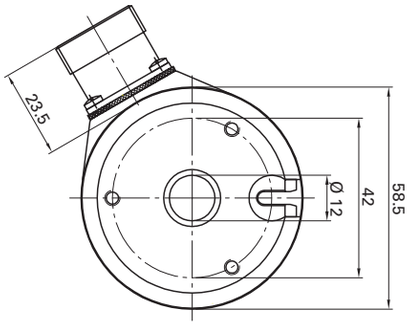

Order Code

Description	Order Code	Weight
Encoder Kit for Linear Motion Unit	LIN 7501	0.660 kg
Encoder including round connector	LIN 7500	0.335 kg

Drawing dimensions in mm

COL 52_0 Connection Shaft With Couplings

Application
Shaft for connecting 2 belt conveyors or two linear motion units.

Technical Data
Material: aluminum, elastomer star

COL 5220 / COL 5230
M nom. 12 Nm
M max. 25 Nm
Tightening torque: 4 Nm (COL 5220)
Tightening torque: 13 Nm (COL 5230)

COL 5240 / COL 5250
M nom. 60 Nm
M max. 120 Nm
Tightening torque: 15 Nm (COL 5240)
Tightening torque: 32 Nm (COL 5250)

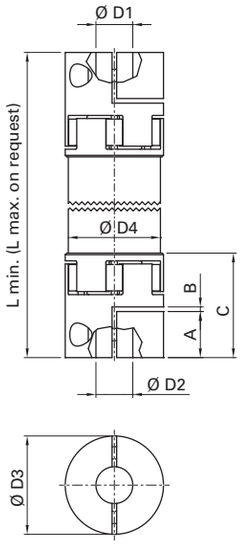

Dimensions

	D1	D2	D3	D4	A	B	C	L min.	E	F	G
COL 5220 (C4T)	12	12	32	30	15	1.5	34	99	38.5	77	10
COL 5230 (C4T - US Version)	12	12	46	35	17.5	0.8	49.8	140	38.5	77	10
COL 5240 (C8T)	20	20	56	60	30	2	63	177	47.5	95	10
COL 5250 (C8T - US Version)	20	20	73	60	23	1	63.5	196	54.5	109	17
COL 5240 (LIL)	20	20	56	60	30	2	63	177	38	76	3
COL 5250 (LIL - US Version)	20	20	73	60	23	1	63.5	196	45	90	10

COL 5220 / COL 5230 (C4T)

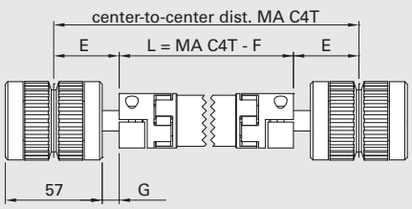

COL 5240 / COL 5250 (C8T)

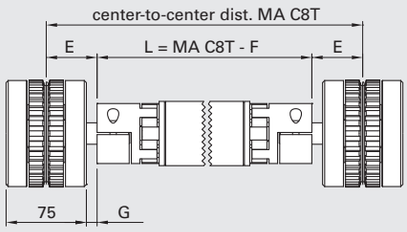

COL 5240 / COL 5250 (LIL)

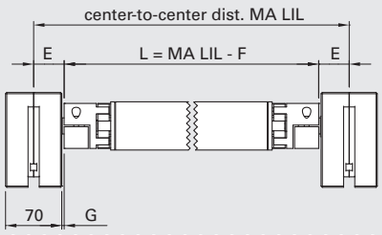

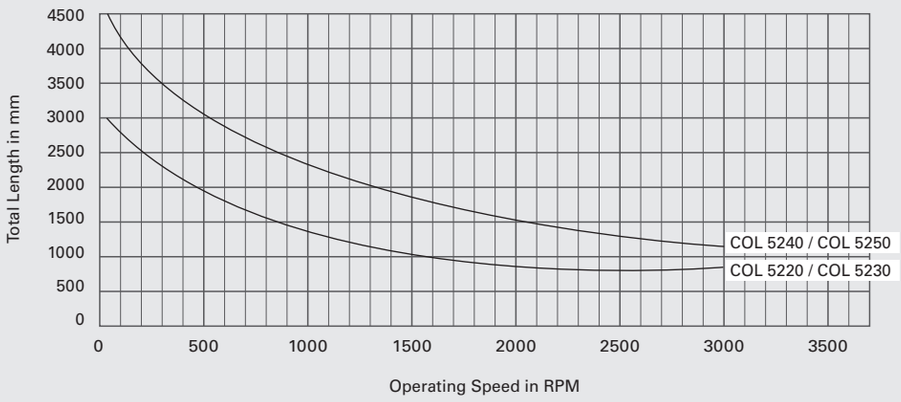

Order Code

Description	Order Code[1] Length
Connection Shaft With Couplings VWZ-30 / d = 12 mm	COL 5220 SNN ____
Connection Shaft With Couplings EDC25 / d = 12 mm	COL 5230 SNN ____
Connection Shaft With Couplings VWZ-60 / d = 20 mm	COL 5240 SNN ____
Connection Shaft With Couplings EDC80 / d = 20 mm	COL 5250 SNN ____

1) Please complete the order code by adding the desired length.

CAL 4012 Cover Extrusion For PIL 4012

Application
Cable duct cover for the extrusion PIL 4012

Technical Data
Material: ABS, gray RAL 7004
Stock length: 3000 mm
Temperature range: -30° to 95°

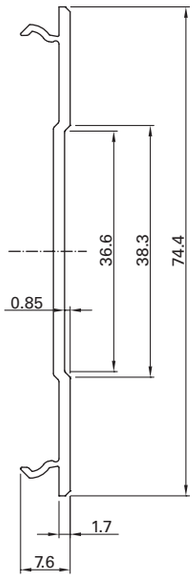

Order Code

Description	Order Code[1] Length	Weight/Meter
Cover Extrusion For PIL4012, cut to length	CAL 4012 SNN ____	0.145 kg
Cover Extrusion For PIL 4012, 3050 mm long (usable length 3000 mm)	CAL 4012 NNN 3050	0.145 kg
Cover Extrusions For PIL 4012, 3050 mm long, 64 pcs. (usable length 3000 mm)	CAL 4012 PAC 0064	0.145 kg

CAP ____ End Cap

Application
Used for covering the ends of extrusions
- Self-centering
- Retained through expanding anchor
- Reusable

Technical Data
Material: black ABS V0 composite

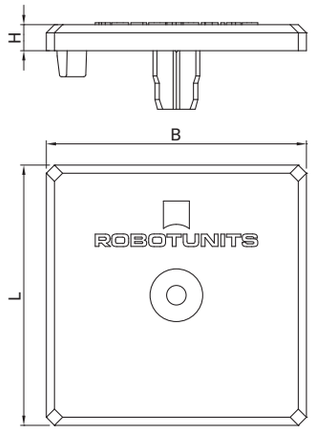

Order Code

Description	L	W	H	Scope of Delivery CAP	Scope of Delivery BKS 4x13	Order Code	Weight
End Cap Kit 16x40	16	40	5	1	2	CAP 1641	0.002 kg
End Cap Kit 40x40	40	40	4	1	1	CAP 4041	0.005 kg
End Cap Kit 40x80	40	80	4	1	2	CAP 4081	0.009 kg
End Cap Kit 40x120	40	120	4	1	3	CAP 4013	0.019 kg
End Cap Kit 80x80 (2 x CAP 4081)	80	80	4	2	4	CAP 8081	0.018 kg
End Cap Kit 50x50	50	50	5	1	1	CAP 5051	0.010 kg
End Cap Kit 50x100	50	100	5	1	2	CAP 5011	0.019 kg
End Cap Kit 50x200 (2 x CAP 5011)	50	200	5	2	4	CAP 5021	0.038 kg
End Cap Kit 100x100 (2 x CAP 5011)	100	100	5	2	4	CAP 1011	0.038 kg
End Cap Kit 100x200 (4 x CAP 5011)	100	200	5	4	8	CAP 1021	0.076 kg
End Cap Kit 25x200	25	200	5	1	4	CAP 2521	0.022 kg

PIN 4530 Cable Block

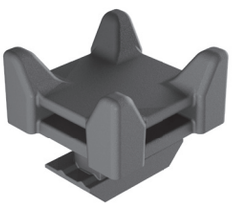

Application
To secure cables, hoses, and lines to extrusions using cable ties in x/y direction from the T-slot

Technical Data
Material: PA composite fiberglass-reinforced, black

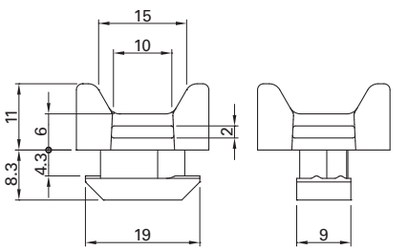

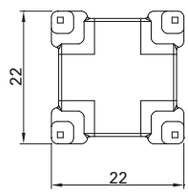

Assembly

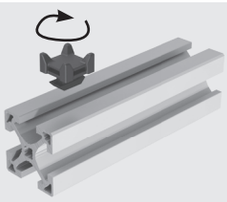

Rotate cable block into T-slot into without tools

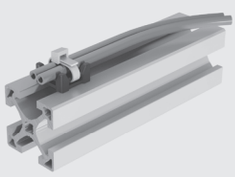

Secure cables or wires with a cable tie

Order Code

Description	Order Code	Weight
Cable Block	PIN 4530	0.005 kg
Cable Blocks, 50 pcs.	PIN 4530 PAC 0050	0.240 kg

PIN 4590 Plastic Hook

Application
For hanging items and objects along the T-slot

Technical Data
Material: PA composite fiberglass-reinforced, black

Load capacity: max. 10 kg

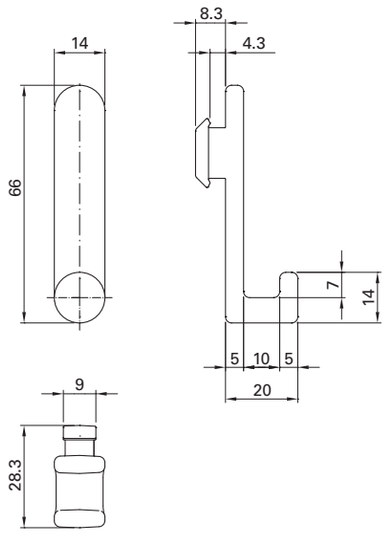

Function

Order Code

Description	Order Code	Weight
Plastic Hook	PIN 4590	0.010 kg

TIN 4501 Fine-Tuning And Fixing Element

Base Part with GST M08x021 SPI

GST M08x040

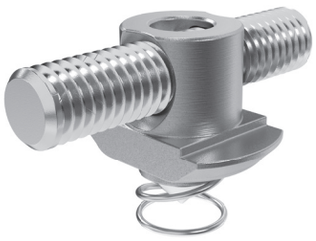

Spring

Application
Used for securing and fine tuning component positions. Post insertion possible, can be used with 40 mm and 50 mm series extrusions, e.g.:

- Conveyor Belt Tracking
- Fine adjustment of cross bars
- Securing connections

Technical Data
Material: galvanized steel

TIN 4501 can also be used for electrical grounding.

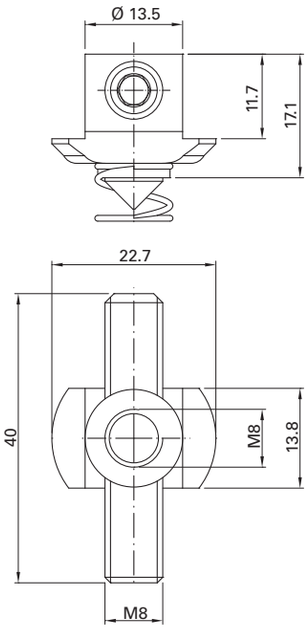

Order Code

Description	Scope of Delivery: Base Part	Spring	GST M08x012 SPI	GST M08x040	Order Code	Weight
Fine-Tuning And Fixing Element Kit	1	1	1	1	TIN 4501	0.029 kg

LIN 404_ / LIN 505_ Linear Slider

Linear Slider 40

Linear Slider 40 with clamping lever

Application
Manual device for clamping / adjusting a slide on the extrusion

Technical Data
Material: clear anodized aluminum
POM-C black, ABS V0 black, galvanized steel

Scope of Delivery
Completely pre-assembled, consisting of:
- 1 Extrusion 25 x 200 PIL 2520
- 2 Sliding guide blocks 40 or 50
- 2 End Caps CAP 2521
- 4 Cylinder screws with hexagon socket IBSM08X035 or 040
- 4 Drop-in Nuts TIN 4508
- 4 Set screws with socket head and tip GSTM10X020SPI
- 1 Clamping lever (for LIN 4041/5051)
- 1 Washer BLS M008 (for LIN 4041/5051)
- 1 T-Nut TIN 6008 (for LIN 4041/5051)

The Linear Slider is not suitable for cantilevered loads and is NOT a replacement for a Linear Motion Unit.

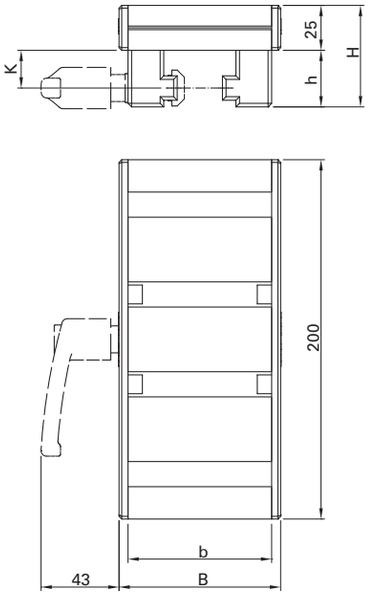

Assembly

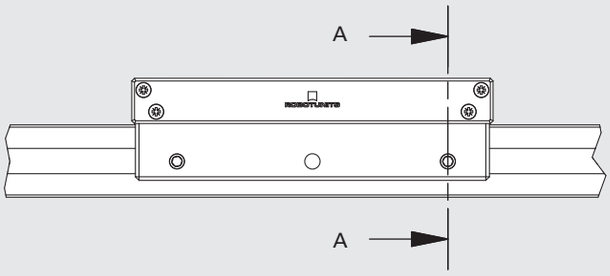

A-A

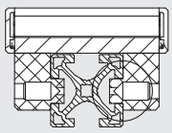

B

Adjusting the guide play X via a set screw

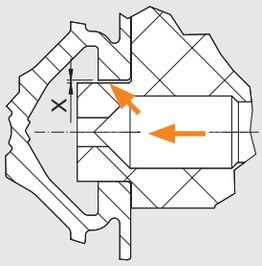

Order Code

Description	b	B	h	H	K	Order Code	Weight
Linear Slider 40	80	90	31.5	56.5	21	LIN 4040	1.170 kg
Linear Slider 40 with clamping lever	80	90	31.5	56.5	21	LIN 4041	1.245 kg
Linear Slider 50	90	100	36.5	61.5	26	LIN 5050	1.245 kg
Linear Slider 50 with clamping lever	90	100	36.5	61.5	26	LIN 5051	1.400 kg

Drawing dimensions in mm

CAL 45__ Cover/Insert Extrusion

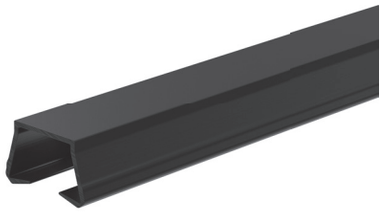

Application
For covering T-slots and fastening 4 - 8 mm thick panels
- Dust protection
- Splash guard
- Cable routing
- Cover extrusion for LED lighting with CAL 4508

Technical Data
Material: impact-resistant PVC with soft lip
Stock length: 2000 mm

LED lighting with CAL4508*
Max. power of the LED: 20 W/m
Light intensity 1 m below the extrusion with a luminous flux of 2000 lm/m: 850 Lux

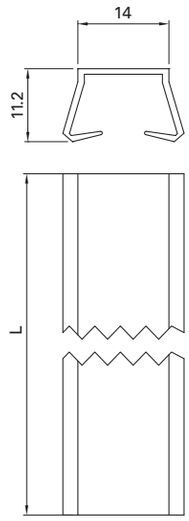

Application

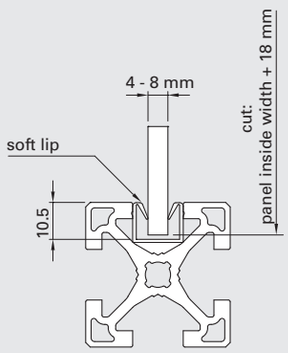

Application as insert extrusion

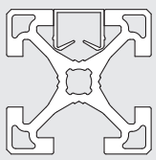

Application as a cover extrusion

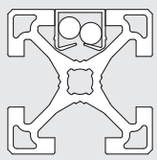

Application as a cover extrusion for cable routing

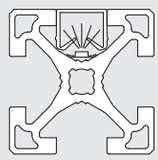

Application as a cover extrusion with LED lighting*

Order Code

Description	Order Code[1] Length	Weight/Meter
Cover/Insert Extrusion, black, cut to length	CAL 4500 SNN ____	0.050 kg
Cover/Insert Extrusion, black, stock length 2000 mm	CAL 4500 NNN 2000	0.050 kg
Cover/Insert Extrusion, black, 160 lengths at 2000 mm	CAL 4500 PAC 0160	0.050 kg
Cover/Insert Extrusion, RAL 1021 yellow, cut to length	CAL 4504 SNN ____	0.050 kg
Cover/Insert Extrusion, RAL 1021 yellow, stock length 2000 mm	CAL 4504 NNN 2000	0.050 kg
Cover/Insert Extrusion, RAL 1021 yellow, 160 lengths at 2000 mm	CAL 4504 PAC 0160	0.050 kg
Cover/Insert Extrusion, white translucent, cut to length	CAL 4508 SNN ____	0.050 kg
Cover/Insert Extrusion, white translucent, stock length 2000 mm	CAL 4508 NNN 2000	0.050 kg
Cover/Insert Extrusion, white translucent, 160 lengths at 2000 mm	CAL 4508 PAC 0160	0.050 kg
Cover/Insert Extrusion, RAL 7004 gray, cut to length	CAL 4510 SNN ____	0.050 kg
Cover/Insert Extrusion, RAL 7004 gray, length 2000 mm	CAL 4510 NNN 2000	0.050 kg
Cover/Insert Extrusion, RAL 7004 gray, 160 lengths at 2000 mm	CAL 4510 PAC 0160	0.050 kg

1) Please complete the order code by adding the desired length.
Drawing dimensions in mm

CAL 4540 T-Slot Sliding Rail

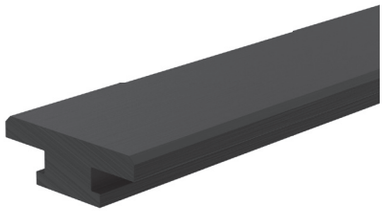

Application
Simple linear guidance in the T-slot

Technical Data
Material: PAS-PE3 composite, black
Stock length: 2000 mm
Temperature range:
-10° to 70° continuous,
90° to 100° short-term

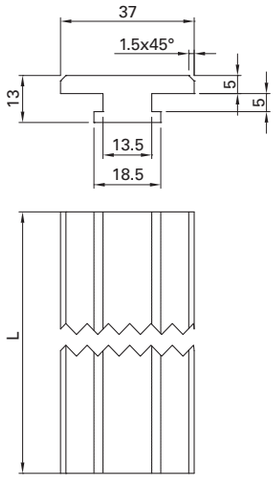

Order Code

Description	Order Code[1] Length	Weight/Meter
T-Slot Sliding Rail, cut to length	CAL 4540 SNN _ _ _ _	0.222 kg
T-Slot Sliding Rail, stock length: 2000 mm	CAL 4540 NNN 2000	0.222 kg

CAL 4545 Aluminum Cover Extrusion

Application
Used for covering T-slots:
- Dust protection
- Splash guard
- Cable routing

Technical Data
Material: anodized aluminum

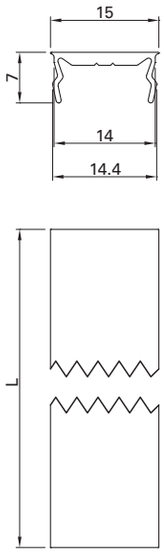

Order Code

Description	Order Code[1] Length	Weight/Meter
Aluminium Cover Extrusion, cut to length	CAL 4545 SNN ____	0.043 kg
Aluminum Cover Extrusion, stock length: 2050 mm (usable length 2000 mm)	CAL 4545 NNN 2050	0.043 kg

1) Please complete the order code by adding the desired length.
Drawing dimensions in mm

CAL 4560 Anti-Slip Profile

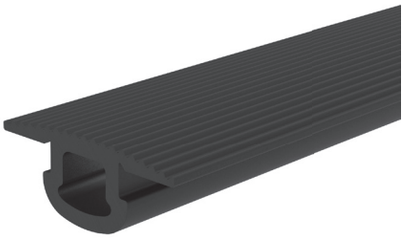

Application
Anti-slip protection for steps
(ladders, stairs, etc.)

Technical Data
Material: NBR 80 Shore A
Temperature range:
-30° to 100° continuous,
-50° to 120° short-term

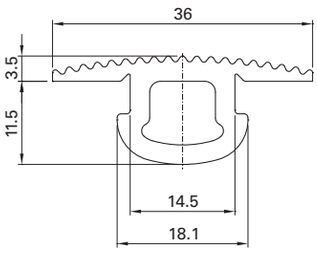

Application

Function of Anti-Slip Profile

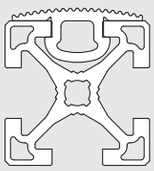

Rework

Cut away this part of the profile

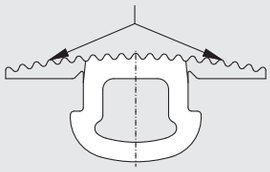

Modification for use as door gasket, bumper, etc.

Useful for many purposes!

The non-slip extrusion can also be used as a sealing extrusion or a buffer extrusion by cutting the side rubber lips.

Order Code

Description	Order Code[1] Length	Weight/Meter
Anti-Slip Profile, cut to length	CAL 4560 SNN _ _ _ _ _	0.213 kg
Anti-Slip Profile, roll length 20 m	CAL 4560 PAC 20000	0.213 kg

1) Please complete the order code by adding the desired length.
Drawing dimensions in mm

CAL 4565 Gasket

Application
Door gasket
- Stops/buffers (drawers, doors)
- Travel stops

Technical Data
Material: NBR 80 Shore A
Temperature range:
-30° to 100° continuous,
-50° to 120° short-term

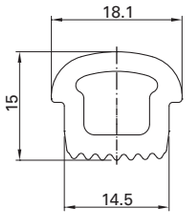

Function

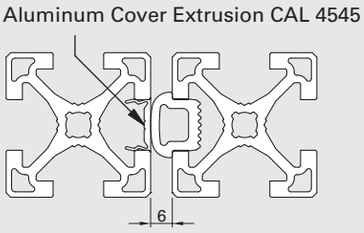

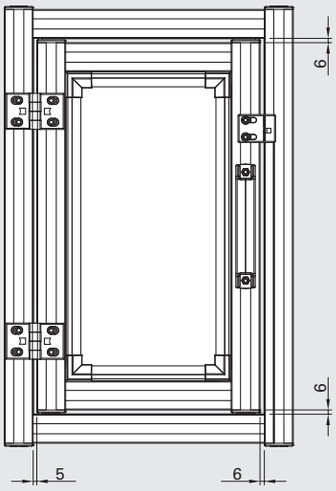

Order Code

Description	Order Code[1] Length	Weight/Meter
Gasket, cut to length	CAL 4565 SNN _ _ _ _ _	0.160 kg

1) Please complete the order code by adding the desired length.
Drawing dimensions in mm

BAP 205_ Safety Fence Floor Bracket

Application
Floor mount of stands and safety fence panels built with 40 mm series extrusions

Technical Data
Material: steel, gray powder coating
Height adjustment - 20 / + 5 mm

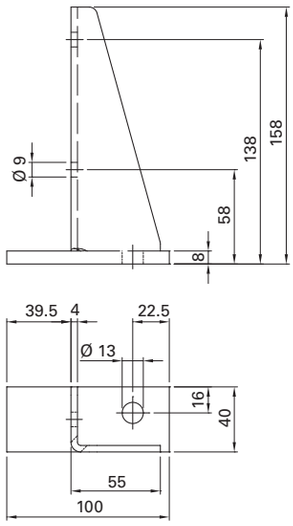

Assembly

Safety Fence Floor Bracket BAP 2051

2 Safety Fence Floor Brackets BAP 2051

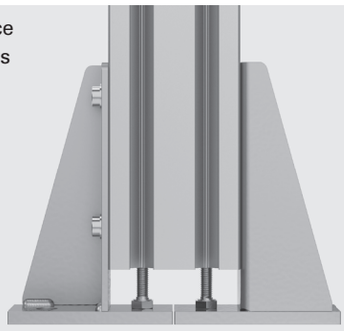

Order Code

Description	Scope of Delivery: BAP 2050	TIN 4508	IBS M08x016NIKO	HKS M08x040	BLS M008	Order Code	Weight
Safety Fence Floor Bracket	1	-	-	-	-	BAP 2050	0.568 kg
Safety Fence Floor Bracket Kit	1	2	2	1	2	BAP 2051	0.638 kg

BAP 2900 Anchor Bolt

Application
For anchoring structures to the floor

Technical Data
Material: galvanized steel

Permitted tensile load: 6.7 kN
(concrete hardness class C20/25)
Minimum anchor depth: 60 mm

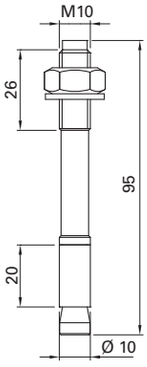

Order Code

Description	Order Code	Weight
Anchor Bolt	BAP 2900	0.055 kg

BAP_0__ Base And Transport Plate

BAP 4080
BAP 5010

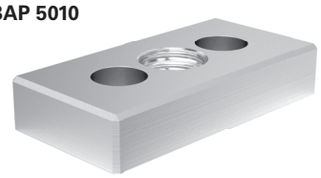

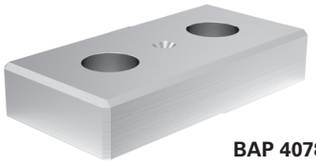

BAP 4078
BAP 5008

BAP 8080
BAP 1010

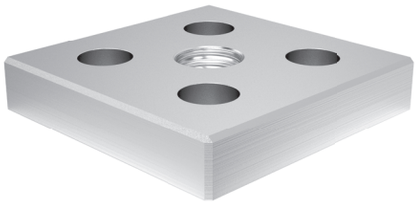

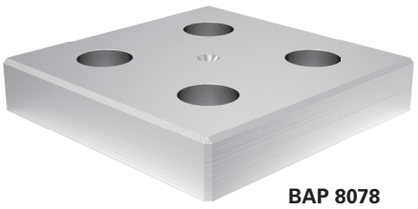

BAP 8078
BAP 1008

Application
Used for attaching leveling bases or other transportation devices.

Technical Data
Material: galvanized steel

Application

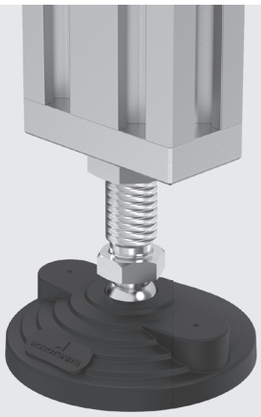

Used as leveling base

Used as transport plate

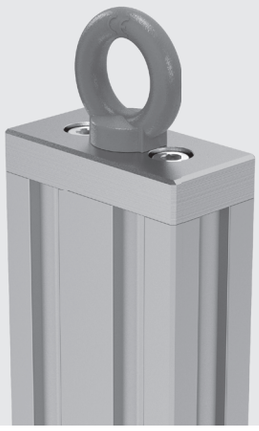

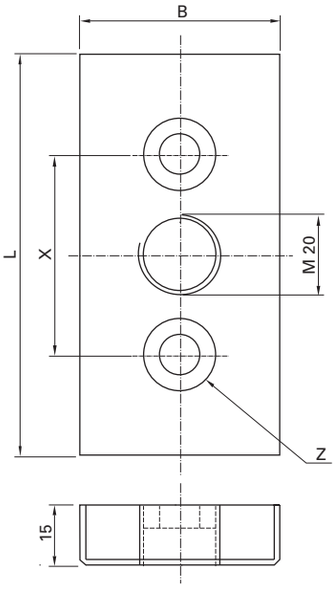

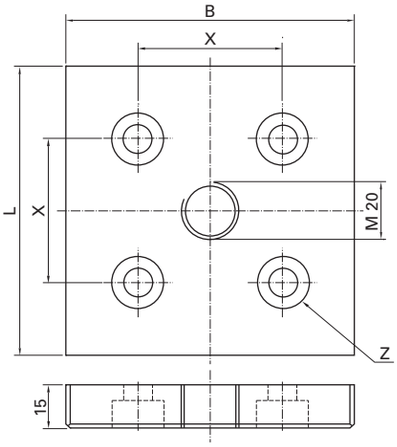

Order Code

Description	L	W	X	Z[1]	Order Code	Weight
Base And Transport Plate 40x80, no thread	80	40	40	IBS M08x020	BAP 4078	0.343 kg
Base And Transport Plate 40x80, M20 thread	80	40	40	IBS M08x020	BAP 4080	0.312 kg
Base And Transport Plate 80x80, no thread	80	80	40	IBS M08x020	BAP 8078	0.682 kg
Base And Transport Plate 80x80, M20 thread	80	80	40	IBS M08x020	BAP 8080	0.655 kg
Base And Transport Plate 50x100, no thread	100	50	50	IBS M10x030	BAP 5008	0.533 kg
Base And Transport Plate 50x100, M20 thread	100	50	50	IBS M10x030	BAP 5010	0.503 kg
Base And Transport Plate 100x100, no thread	100	100	50	IBS M10x030	BAP 1008	1.049 kg
Base And Transport Plate 100x100, M20 thread	100	100	50	IBS M10x030	BAP 1010	1.018 kg

1) Not included in the scope of delivery
Drawing dimensions in mm

BAS __08 Leveling Base M8

BAS 4008

Application
Pivoting, height adjustable floor bracket for stands, frames and enclosures
- Continuous height adjustment (+/- 15 mm)
- Vibration damping
- Ball joint

Technical Data
BAS 4008
Material: galvanized steel;
PA 6 composite; rubber
Max. load 350 kg

BAS 5108
Material: galvanized steel, rubber
Max. load 800 kg

BAS 4008

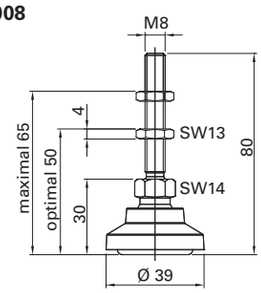

BAS 5108

BAS 5108

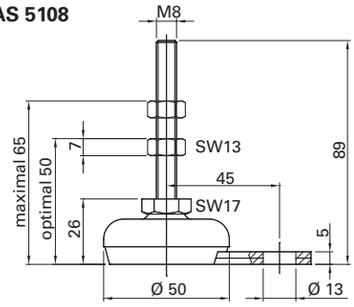

Order Code

Description	Order Code	Weight
Leveling Base, M8x40	BAS 4008	0.062 kg
Leveling Base with Mounting Plate M8x50	BAS 5108	0.140 kg

BAS __10 Leveling Base M10

BAS 5010

Application
Pivoting, height adjustable floor bracket for stands, frames and enclosures
- Continuous height adjustment (+/- 15 mm)
- Vibration damping
- Ball joint

Technical Data
BAS 5010
Material: galvanized steel;
PA 6 composite; rubber
Max. load 470 kg

BAS 5110
Material: galvanized steel, rubber
Max. load 800 kg

BAS 5010

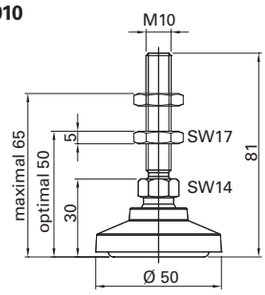

BAS 5110

BAS 5110

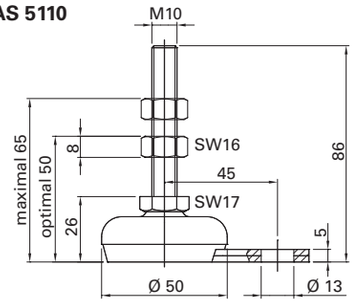

Order Code

Description	Order Code	Weight
Leveling Base, M10x50	BAS 5010	0.087 kg
Leveling Base with Mounting Plate M10x50	BAS 5110	0.180 kg

Drawing dimensions in mm

BAS 1_20 Leveling Base M20

BAS 1020

BAS 1120

Application
Pivoting, height adjustable floor bracket for stands, frames and enclosures

- Continuous height adjustment (+/- 30 mm)
- Vibration damping
- Ball joint

Technical Data
BAS 1020
Material: galvanized steel;
PA 6 composite; rubber
Max. load 1000 kg

BAS 1120
Material: galvanized steel;
PA 6 composite; rubber
Max. load 1000 kg

BAS 1020

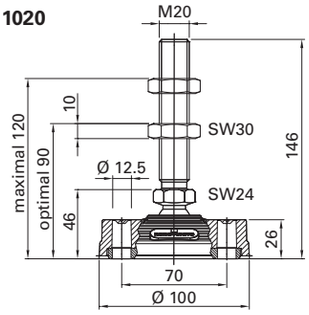

BAS 1120

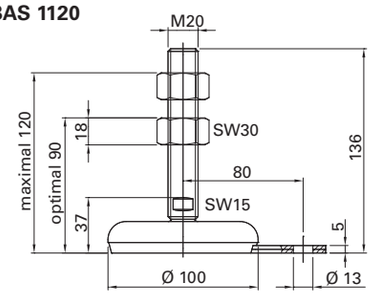

Order Code

Description	Order Code	Weight
Leveling Base, M20x100	BAS 1020	0.496 kg
Leveling Base with Mounting Plate M20x100	BAS 1120	0.690 kg

CAS _08_ Castor With Plate

CAS 0080

Application
Transport carts of all types

Technical Data
Material: galvanized steel, rubber

Safe working load: 100 kg

CAS 0080

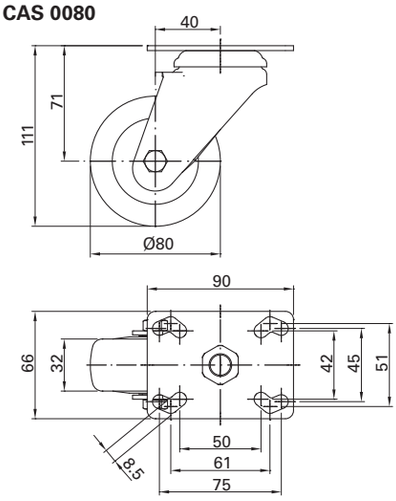

CAS 0082

CAS 0082

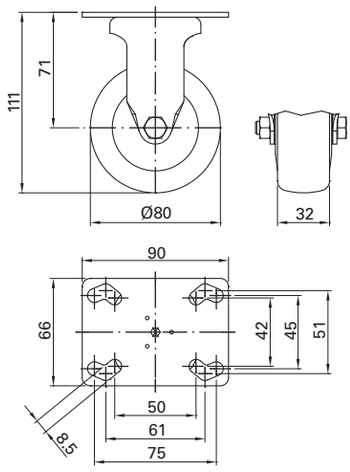

CAS 1080

CAS 1080

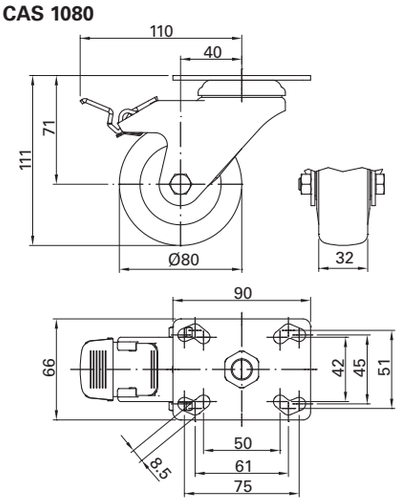

Order Code

Description	Order Code	Weight
Swivel Castor With Plate 80 mm	CAS 0080	0.604 kg
Rigid Castor With Plate 80 mm	CAS 0082	0.462 kg
Swivel Castor With Plate and Brake 80 mm	CAS 1080	0.716 kg

CAS _08_ Castor With Bolt Hole Fitting

CAS 2080

Application
Transport carts of all types

Technical Data
Material: galvanized steel, rubber

Safe working load: 100 kg

Fastening material for end-to-end assembly on the extrusion (not included in the scope of delivery);
PIL 4040: BLSM008S04, IBSM08x035
PIL 5050: BLSM010, IBSM10x040

CAS 2080

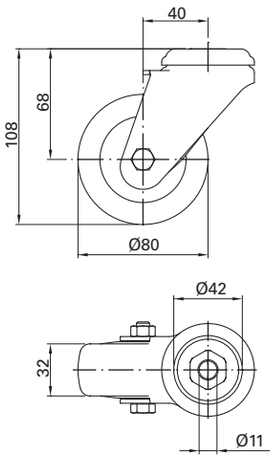

CAS 2082

CAS 2082

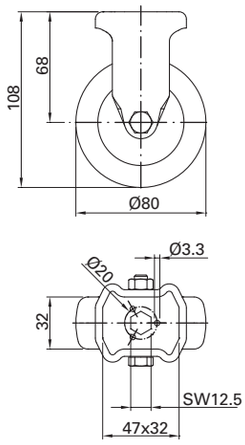

CAS 3080

CAS 3080

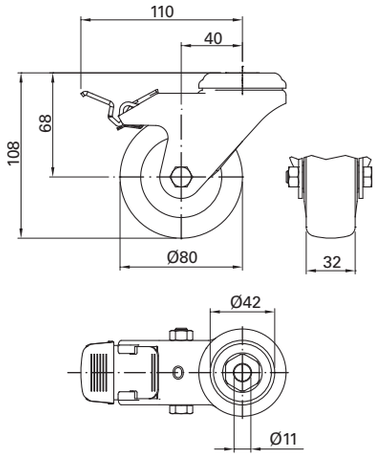

Order Code

Description	Order Code	Weight
Swivel Castor With Bolt Hole Fitting 80 mm	CAS 2080	0.489 kg
Rigid Castor With Bolt Hole Fitting 80 mm	CAS 2082	0.317 kg
Swivel Castor With Bolt Hole Fitting and Brake 80 mm	CAS 3080	0.597 kg

EQC 1001_ Allen Key For Hex Socket Head Cap Screws

Application
Allen Key with ball head for manual tightening the hex socket head cap screws for 40 and 50mm series fasteners.
A plastic sleeve prevents damage to the edges of the T-slot.

Technical Data
Material: high-quality, plastic-coated tool steel

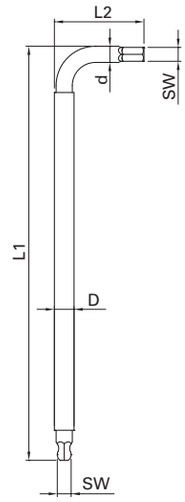

Application

Allen Key For Hex Socket Head Cap Screws, size 5 mm, for 40 mm series fasteners (FAS4041, FAS4081)

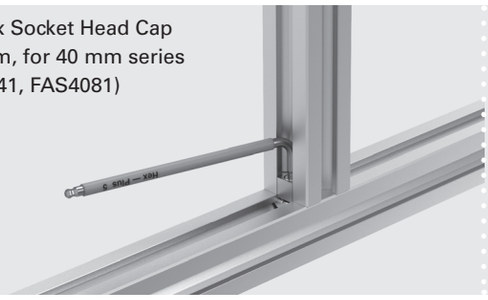

Allen Key For Hex Socket Head Cap Screws, size 6mm, for 50 mm series fasteners and corner brackets (e.g. FAS5051, GUS4501, etc.)

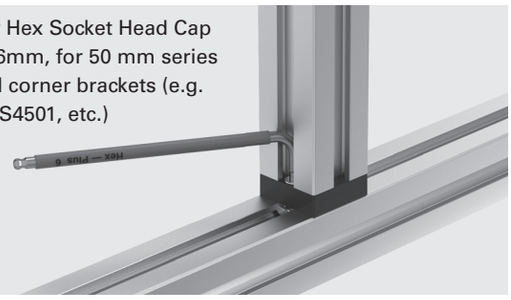

Order Code

Description	SW	d	D	L1	L2	Order Code	Weight
Allen Key For Hex Socket Head Cap Screws, 5 mm	5	6	7.5	160	35	EQC10016	0.040 kg
Allen Key For Hex Socket Head Cap Screws, 6 mm	6	7	8.5	180	40	EQC10017	0.060 kg

Drawing dimensions in mm

EQC 1005_ 1/4" Hex Bit With Ball End

Application
1/4" Hex Bit with ball head for impact driver to tighten the hex socket head cap screws for 40 and 50mm series fasteners.
Cylindrical end prevents damage to the edges of the T-slot.

Technical Data
Material: high-quality, tool steel

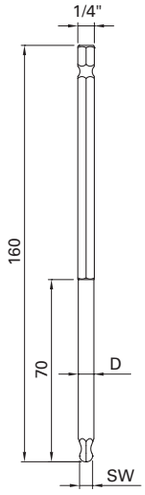

Application

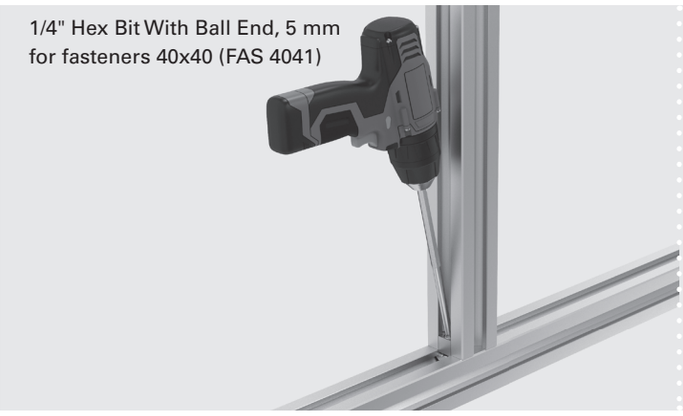

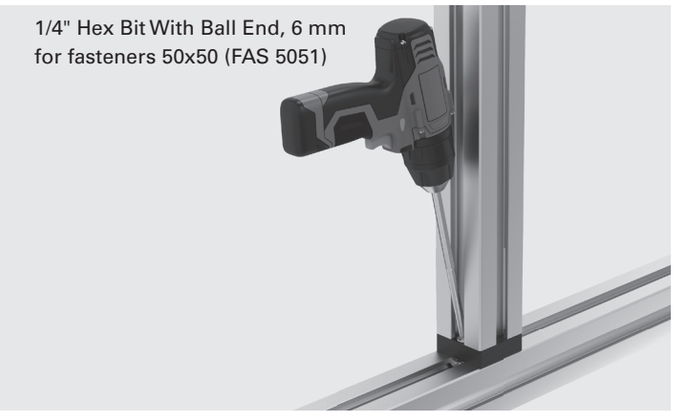

Order Code

Description	SW	D	Order Code	Weight
1/4" Hex Bit With Ball End, 5 x 160 mm	5	6	EQC10051	0.040 kg
1/4" Hex Bit With Ball End, 6 x 160 mm	6	6.7	EQC10052	0.060 kg

Drawing dimensions in mm

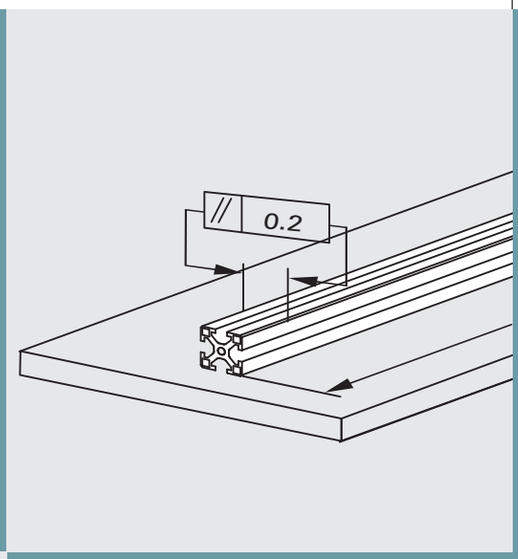
0.2

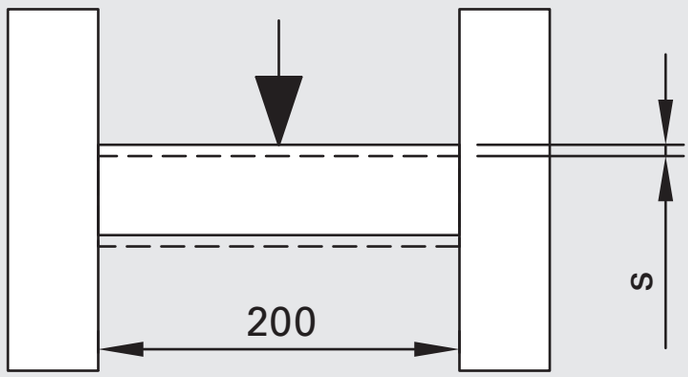
200
S

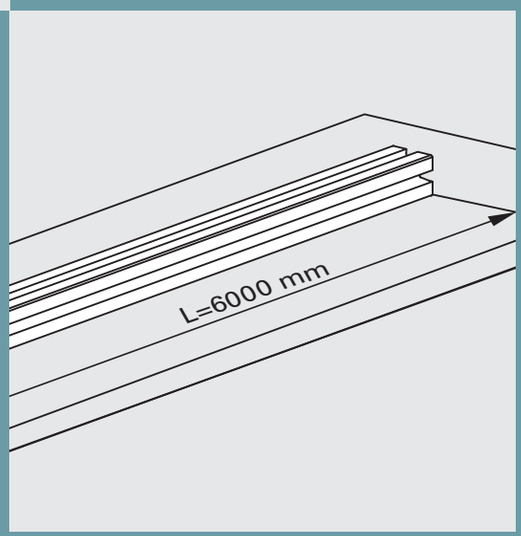
L=6000 mm

Technical appendix

Linear Motion System Description Key ..... Page 192

Linear Motion System Dimension ..... Page 192

Linear Motion System Carriage Combination Examples ..... Page 192

Linear Motion System Load Capacity ..... Page 193

Linear Motion System Assembly Tips ..... Page 193

Linear Motion System Calculations ..... Page 194

Extrusion Tolerances ..... Page 196

Deflection Calculations ..... Page 197

Torsion Calculations ..... Page 197

Standard Screw Drawing ..... Page 197

Fastener Loads ..... Page 198

Safety Distances for Safety Systems ..... Page 199

Part Description Index ..... Page 200

Part Number Index ..... Page 204

Linear Motion System Description Key

$F_{(x,y,z)\ max.}$	[N]	maximum rated external static load
$F_{(x,y,z)}$	[N]	actual external static load
F_R	[N]	maximum rated load / roller - radial (max. 1500 N)
F_A	[N]	Maximum rated load / roller - axial (max. 750 N)
$M_{(x,y,z)\ max.}$	[Nm]	maximum rated static torque load
$a_{max.}$	[m/s²]	maximum rated acceleration
X	[m]	distance between rollers in direction of motion
Y	[m]	distance between rollers perpendicular to direction of motion
A	[m]	extrusion width between rollers
g	[m/s²]	gravitational acceleration (approx. 9.81 m/s2)
m_1	[kg]	mass of carriage and lever
m_2	[kg]	mass of mounted parts
$F_{a\ req.}$	[N]	required drive power
$M_{d\ hor\ req.}$	[Nm]	required drive torque in horizontal direction
$M_{d\ ver\ req.}$	[Nm]	required drive torque in vertical direction
L_1	[m]	distance of center of gravity of carriage plate and lever
L2	[m]	distance of center of gravity of mounted parts and/or distance of forces F (x,y,z)

Linear Motion System Dimensions

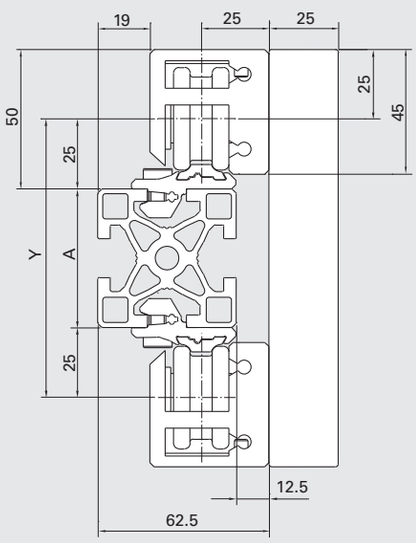

	LIN 1501	LIN 2001
Y	0.1	0.15

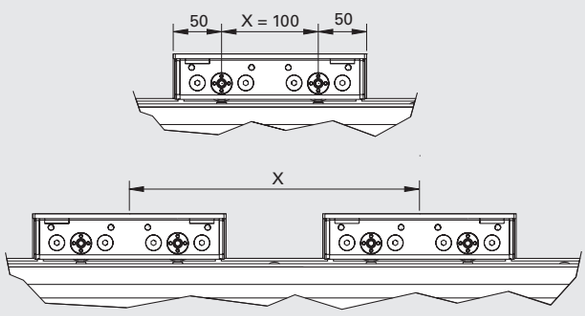

Linear Motion System Carriage Combination Examples

PIL 2520

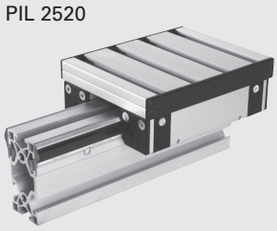

PIL 5010

PIL 2520

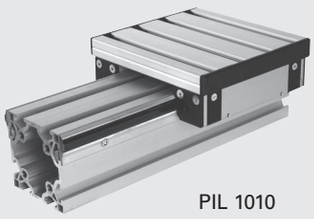

PIL 1010

PIL 2520

PIL 5020

PIL 5020

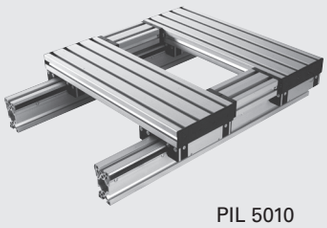

PIL 5010

Linear Motion System Load Capacity

F_R < 1500 N
F_A < 750 N

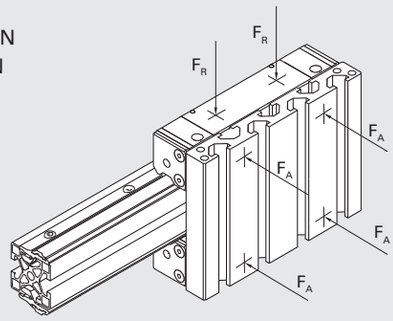

$$F_1 \leq \frac{2 \cdot F_A \cdot A}{L}$$

L = Force application lever
A = extrusion width between rollers

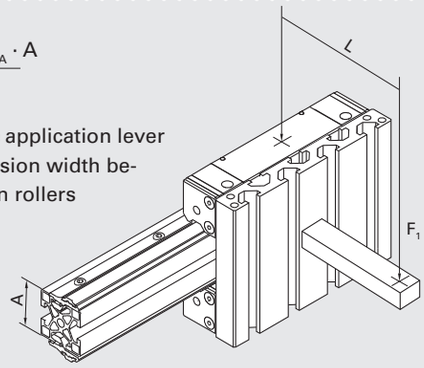

Technical Data
Acceleration: $a_{max.}$ < 15m/s2
Max. drive torque: 60 Nm
Forces: F_R [N] permissible load / roller - radial (max. 1500 N)
F_A [N] permissible load / roller - axial (max. 750 N)

Maintenance:
Lubrication: In order to ensure maximum service life of the guide-rail make sure that it is sufficiently lubricated.
Check the scraper and lubrication devices on a regular basis and re-lubricate as needed.

Load: Load data is valid for one type of load and one direction of load.
“Static design” refers to weight and operation forces. “Dynamic design” refers to weight and acceleration forces.

Linear Motion System Assembly Tips

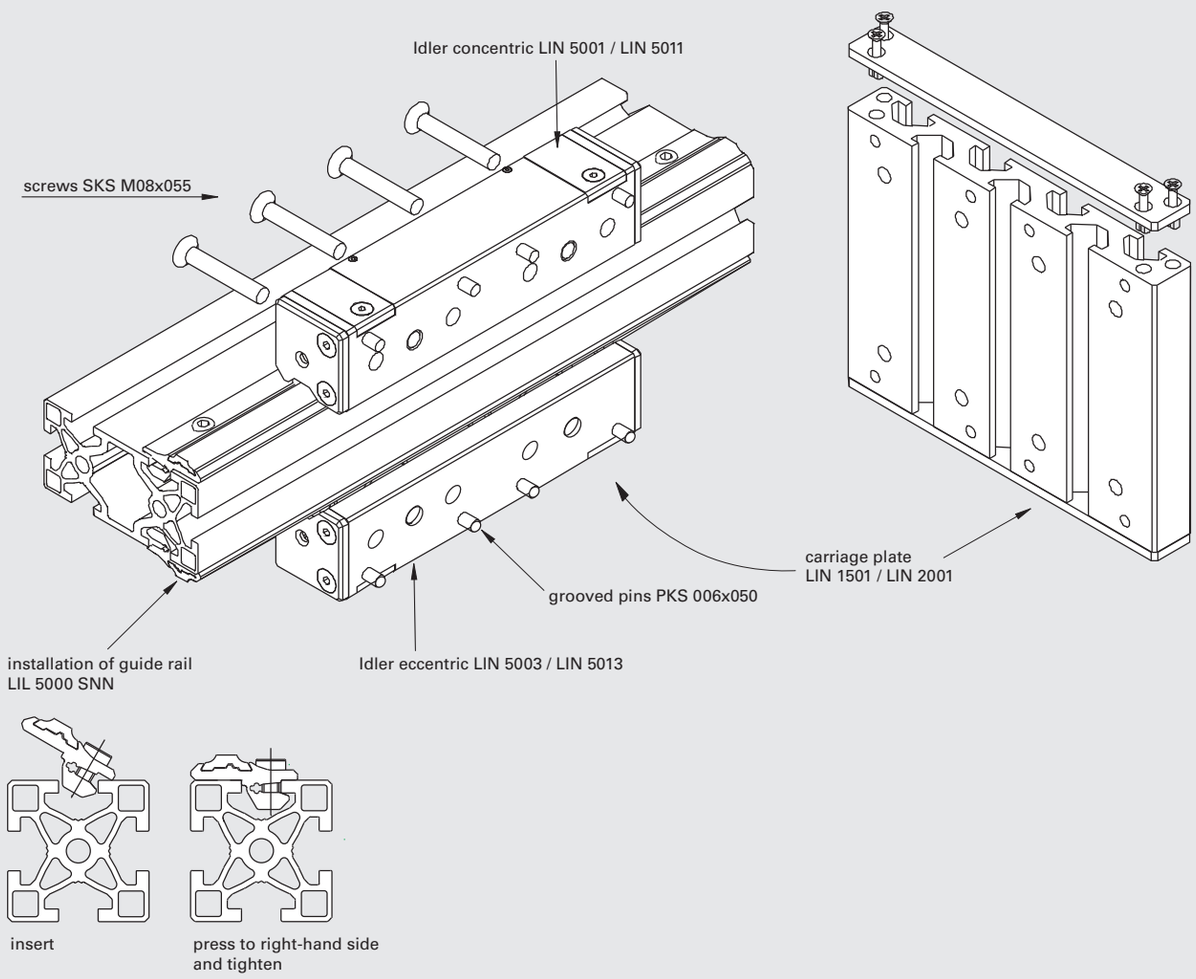

Linear Motion System Calculations

Application A (horizontal)

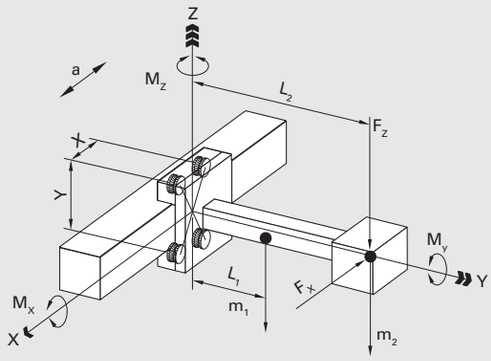

Static design:

$$M_{X\,max.} = 2 \cdot F_A \cdot A$$

$$F_{Z\,max.} = \frac{M_{X\,max.} - g\,(m_1 \cdot L_1 + m_2 \cdot L_2)}{L_2}$$

$$M_{Z\,max.} = 2 \cdot F_A \cdot X$$

$$F_{X\,max.} = \frac{M_{Z\,max.}}{L_2}$$

Dynamic design:

$$a_{max.} = \frac{F_A \cdot X}{(m_1 \cdot L_1 + m_2 \cdot L_2) \cdot 4} - \frac{g \cdot X}{9 \cdot Y}$$

$$F_{a\,req.} = (m_1 + m_2) \cdot a_{max.} + 10N$$

$$M_{d\,hor\,req.} = F_{a\,req.} \cdot 0.035\,m \cdot 1.8$$

Application B (horizontal)

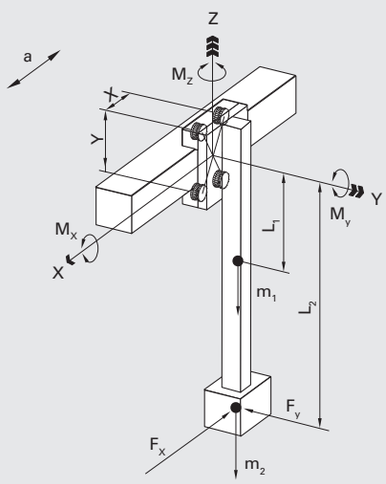

Static design:

$$M_{X\,max.} = 2 \cdot F_A \cdot A$$

$$F_{Y\,max.} = \frac{M_{x\,max.}}{L_2}$$

$$M_{Y\,max.} = \left(F_R - \frac{(m_1 + m_2) \cdot g}{2}\right) \cdot \left(\sqrt{x^2 + y^2} - 0.036\right)$$

$$F_{X\,max.} = \frac{M_{Y\,max.}}{L_2}$$

Dynamic design:

$$a_{max.} = \frac{\left(F_R - \frac{(m_1 + m_2) \cdot g}{2}\right) \cdot \left(\sqrt{x^2 + y^2} - 0.036\right)}{(m_1 \cdot L_1 + m_2 \cdot L_2) \cdot 2}$$

$$F_{a\,req.} = (m_1 + m_2) \cdot a_{max.} + 10N$$

$$M_{d\,hor\,req.} = F_{a\,req.} \cdot 0.035\,m \cdot 1.8$$

Application C (vertical)

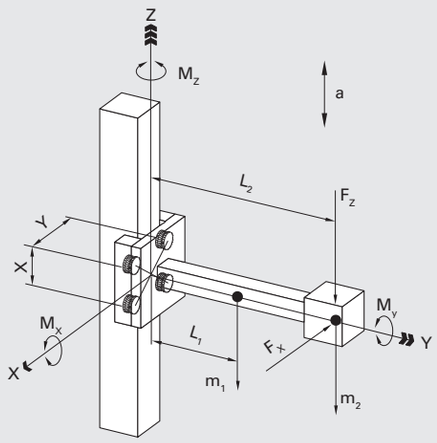

Static design:

$$M_{X\,max.} = 2 \cdot F_A \cdot X$$

$$F_{Z\,max.} = \frac{M_{x\,max.} - g \cdot (m_1 \cdot L_1 + m_2 \cdot L_2)}{L_2}$$

$$M_{Z\,max.} = 2 \cdot F_A \cdot Y$$

$$F_{X\,max.} = \frac{M_{Z\,max.}}{L_2}$$

Dynamic design:

$$a_{max.} = \frac{2 \cdot F_A \cdot X}{(m_1 \cdot L_1 + m_2 \cdot L_2) \cdot 2} - g$$

$$F_{a\,req.} = (m_1 + m_2) \cdot (a_{max.} + g) + 10N$$

$$M_{d\,ver\,req.} = F_{a\,req.} \cdot 0.035\,m \cdot 1.8$$

Linear Motion System Calculations

Application D (vertical)

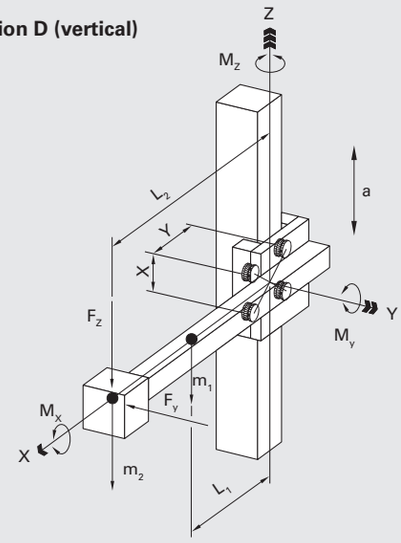

Static design:

$M_{Y\,max.} = FR * \sqrt{x^2+y^2} - 0.036)$

$F_{Z\,max.} = \dfrac{M_{Y\,max.} - g\,(m_1 \cdot L_1 + m_2 \cdot L_2)}{L_2}$

$M_{Z\,max.} = 2 \cdot F_A \cdot Y$

$F_{Y\,max.} = \dfrac{M_{Z\,max.}}{L_2}$

Dynamic design:

$a_{max.} = \dfrac{F_R \cdot (\sqrt{x^2 + y^2} - 0.036)}{(m_1 \cdot L_1 + m_2 \cdot L_2) \cdot 2} - g$

$F_{a\,req.} = (m_1 + m_2) \cdot (a_{max.} + g) + 10N$

$M_{d\,ver\,req.} = F_{a\,req.} \cdot 0.035\ m \cdot 1.8$

Application E (horizontal)

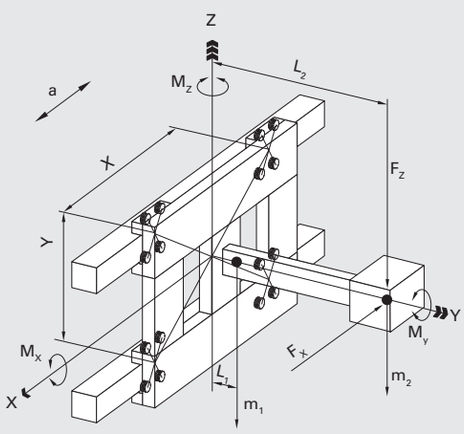

Static design:

$M_{X\,max.} = 8 * F_A * (y - 0.15)$

$F_{Z\,max.} = \dfrac{M_{X\,max.} - g\,(m_1 \cdot L_1 + m_2 \cdot L_2)}{L_2}$

$M_{Z\,max.} = 4 * F_A * X$

$F_{X\,max.} = \dfrac{M_{Z\,max.}}{L_2}$

Dynamic design:

$a_{max.} = \dfrac{4 \cdot F_A \cdot X}{(m_1 \cdot L_1 + m_2 \cdot L_2) \cdot 2}$

$F_{a\,req.} = (m_1 + m_2) \cdot a_{max.} + 40N$

$M_{d\,hor\,req.} = F_{a\,req.} \cdot 0.035\ m \cdot 1.8$

Application F (vertical)

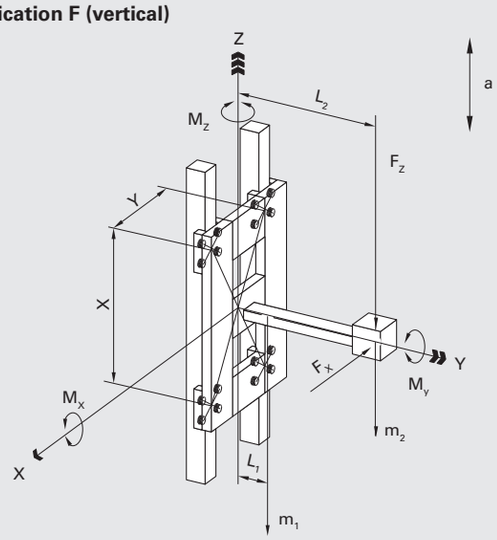

Static design:

$M_{X\,max.} = 4 \cdot F_A \cdot X$

$F_{Z\,max.} = \dfrac{M_{x\,max.} - g \cdot (m_1 \cdot L_1 + m_2 \cdot L_2)}{L_2}$

$M_{Z\,max.} = 4 \cdot F_A \cdot Y$

$F_{X\,max.} = \dfrac{M_{Z\,max.}}{L_2}$

Dynamic design:

$a_{max.} = \dfrac{4 \cdot F_A \cdot X}{(m_1 \cdot L_1 + m_2 \cdot L_2) \cdot 2} - g$

$F_{a\,req.} = (m_1 + m_2) \cdot (a_{max.} + g) + 40N$

$M_{d\,ver\,req.} = F_{a\,req.} \cdot 0.035\ m \cdot 1.8$

Extrusion Tolerances

Straightness

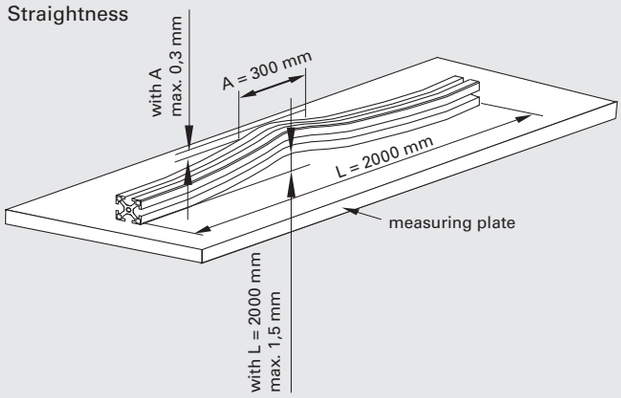

Torsion

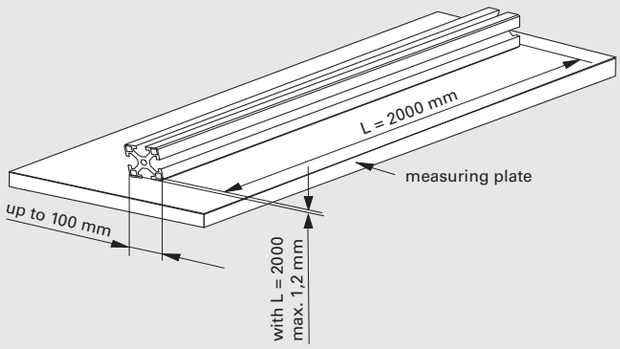

Parallelism

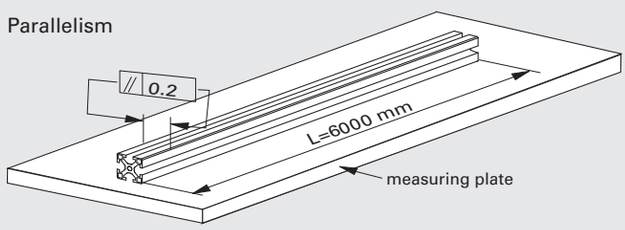

Technical data – extrusions:

Material description:	EN AW-6063 -T66
Minimum tensile strength R_m (in direction of pressure):	245 N/mm²
Yield strength R_p (in direction of pressure):	200 N/mm²
Modulus of elasticity E:	70000 N/mm²
Shear Modulus G:	26000 N/mm²
Coefficient of linear expansion:	α = 23 · 10-6 1/K
Brinell hardness:	approx. 70 HB
Breaking elongation A5:	12%
Material density:	2.7 kg/dm³
Cutting data:	
Length tolerance (up to 6000 mm):	±0.2 mm
Rectangular accuracy:	up to 50 mm ±0.05 mm up to 100 mm ±0.1 mm up to 200 mm ±0.2 mm
Tolerances for precision extrusions:	DIN EN 12020-2
Groove tolerance:	14 +0.25 / -0 mm

E	[N/mm²]	Modulus of elasticity
F	[N]	Load
F_G	[N]	Net weight
f	[mm]	Deflection
L	[mm]	Length
I	[cm⁴]	Moment of inertia (see extrusion data sheets)
W	[cm³]	Section modulus (see extrusion data sheets)
$\sigma_{max.}$	[N/mm²]	Permissible bending stress (recommendation 70 N/mm²)
M_t	[Nmm]	Torque
I_t	[cm⁴]	Torsional moment of area
G	[26000 N/mm²]	Sheer Modulus
φ	[°]	Rotation angle

Deflection Calculations

Load case example 1

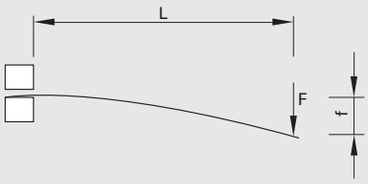

Deflection by force F

$$f = \frac{F \cdot L^3}{3 \cdot E \cdot I \cdot 10^4} \text{ [mm]}$$

Deflection under own weight

$$f = \frac{F_G \cdot L^3}{8 \cdot E \cdot I \cdot 10^4} \text{ [mm]}$$

Bending stress σ max.

$$\sigma = \frac{F \cdot L}{W \cdot 10^3} \text{ [N/mm}^2\text{]}$$

Load case example 2

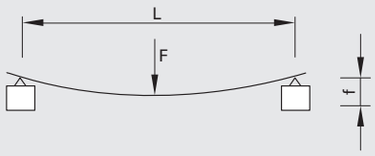

$$f = \frac{F \cdot L^3}{48 \cdot E \cdot I \cdot 10^4} \text{ [mm]}$$

Deflection under own weight

$$f = \frac{5 \cdot F_G \cdot L^3}{384 \cdot E \cdot I \cdot 10^4} \text{ [mm]}$$

Bending stress σ max.

$$\sigma = \frac{F \cdot L}{4 \cdot W \cdot 10^3} \text{ [N/mm}^2\text{]}$$

Load case example 3

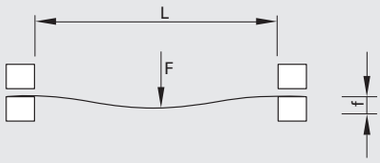

$$f = \frac{F \cdot L^3}{192 \cdot E \cdot I \cdot 10^4} \text{ [mm]}$$

Deflection under own weight

$$f = \frac{F_G \cdot L^3}{384 \cdot E \cdot I \cdot 10^4} \text{ [mm]}$$

Bending stress σ max.

$$\sigma = \frac{F \cdot L}{8 \cdot W \cdot 10^3} \text{ [N/mm}^2\text{]}$$

Torsion Calculations

Load case example 1

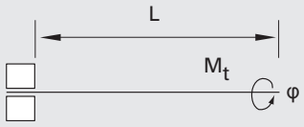

$$\Phi = \frac{180° \cdot M_t \cdot L}{\pi \cdot G \cdot I_t \cdot 10^4} \text{ [mm]}$$

Load case example 2

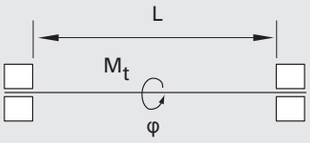

$$\Phi = \frac{180° \cdot M_t \cdot L}{\pi \cdot 4 \cdot G \cdot I_t \cdot 10^4} \text{ [mm]}$$

Checking the shear stress

The critical factor for failure of an extrusion subject to torsional load is in practice not so much the exceeding of the maximum approved torsional load applied to the extrusion, but rather elastic deformation (torsion). This deformation will affect the functioning of any parts to be assembled onto the extrusion, and so a more torsion-resistant extrusion must be selected, well before the approved maximum values for the torsional load have been reached.

Standard Screw Drawing

Code	Screw designation	ISO standard	DIN standard
IBS M__x___	Socket-head cap screw	ISO 4762	DIN 912
IBS M__x____NIKO	Socket-head cap screw with flat head		DIN 6912
SKS M__x___	Socket-head countersunk screw	ISO 10642	DIN 7991
LKS M__x___	Button head cap screw with socket head	ISO 7380	
HKS M__x____	Hexagon head screw	ISO 4017	DIN 933
SKM M____	Hexagonal nut	ISO 4032	DIN 934
SKM M___FLA	Hexagonal nut, flat form	ISO 4035	DIN 936
BLS M____	Washer	ISO 7089	DIN 125
BLS M___S___	Washer		DIN 7349
GST M__x____	Set screw with socket head and conical cup	ISO 4026	DIN 913
GST M__x____SPI	Set screw with socket head and tip	ISO 4027	DIN 914
GST M__x____FED	Spring-loaded pressure part with band and hexagonal socket head		
BKS _x__	Countersunk flat head tapping screw	ISO 7050	DIN 7982
PAF _x_x____	Key	ISO 773	DIN 6885
PKS ___x___	Grooved pin	ISO 8745	DIN 1472
SIR __x__	Circlip		DIN 471
SPS _x___	Clamping pin, lightweight	ISO 13337	DIN 7346

Fastener Loads

Static Test
Basic values only

A safety factor of 3
is recommended.

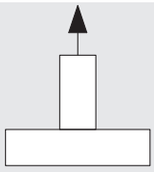

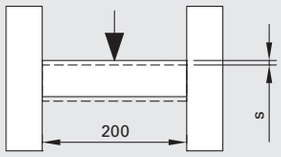

		Maximum force (Breaking force)	Maximum force (Deflection force)	Deflection force at s = 1 mm
Fastener with 2 drop-in nuts and bolts	PIL 4040 PIL 4080 (upright)	21 kN	12 kN	5.5 kN
Fastener with 4 drop-in nuts and bolts	PIL 4080 (flat) PIL 8080	43 kN	21 kN	11.5 kN
Fastener with 2 drop-in nuts and bolts	PIL 5050 PIL 5010 (upright) PIL 5020 (upright)	40 kN	10 kN	6 kN
Fastener with 4 drop-in nuts and bolts	PIL 5010 (flat) PIL 1010	76 kN	19 kN	9.5 kN
	PIL 1020 (upright)	64 kN	12 kN	8 kN
Fastener with 8 drop-in nuts and bolts	PIL 5020 (flat)	150 kN	35 kN	15 kN
	PIL 1020 (flat)	110 kN		

Safety Distances for Safety Systems

General safety distances

Safety distances relative to human size must be taken into consideration when securing dangerous areas. These safety distances are based on the reach of a person (14 years or older) in the direction of the dangerous area with their own body parts and without the use of objects, then a safety margin is added.

Opening width e	Safety clearance		
	Slot	Square	Circle
e ≤ 4	≥ 2	≥ 2	≥ 2
4 < e ≤ 6\	≥ 10	≥ 5	≥ 5
6 < e ≤ 8	≥ 20	≥ 15	≥ 5
8 < e ≤ 10	≥ 80	≥ 25	≥ 20
10 < e ≤ 12	≥ 100	≥ 80	≥ 80
12 < e ≤ 20	≥ 120	≥ 120	≥ 120
20 < e ≤ 30	≥ 850*	≥ 120	≥ 120
30 < e ≤ 40	≥ 850	≥ 200	≥ 120
40 < e ≤ 120	≥ 850	≥ 850	≥ 850

* If the length of the slit-shaped opening ≤ 65 mm, the thumb acts as a limit and the safety distance can be reduced to 200 mm.

Reaching around edges

When reaching around arbitrary edges, the safety distances are as follows:
for the hand from the base to the tips of the fingers
at least 130 mm
for the hand from the wrist to the tips of the fingers
at least 230 mm
for the arm from the elbow to the tips of the fingers
at least 550 mm
for the arm from the shoulder to the tips of the fingers
at least 850 mm

Entry into dangerous areas with the lower limbs

Acc to DIN EN ISO 13857, for a ground clearance ≤ 200 mm, the foot safety distance must be ≥ 665 mm. This strictly assumes a standing position without any additional assistance.
According to DIN EN ISO 13857, slotted openings > 180 mm and square or round openings > 240 mm permit entry for the entire body.
If there is a risk of slipping or abuse, the specified value may be unsuitable. Additional measures may be necessary to restrict access.

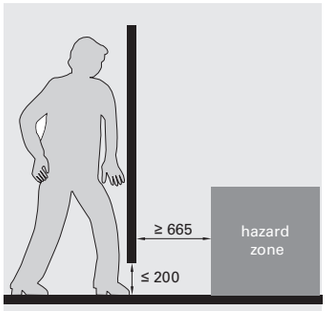

Reaching over edges on work or safety equipment

When reaching over edges on equipment or safety mechanisms, the required safety distance is satisfied if the height of the dangerous area in mm (A) and the height of the protective structure in mm (B) are no less than the corresponding value in the table below for horizontal distance from the dangerous area in mm (C). This assumes that the protective structure has a height of over 1000 mm. The area between the safety structure and the dangerous area may not be entered.

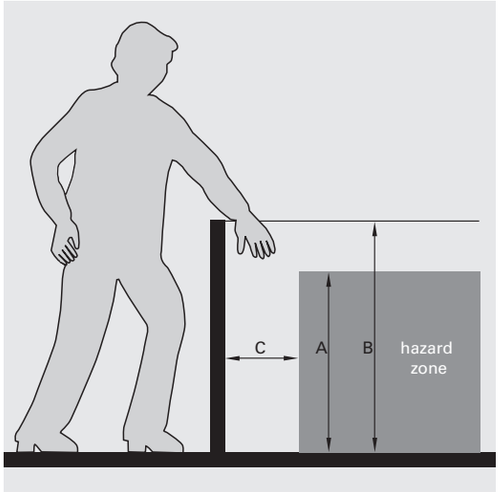

Height of danger area in mm (A)	Height of protective structure in mm (B)							
	2400	2200	2000	1800	1600	1400	1200	1000
	Horizontal distance from danger area in mm (C)							
2400	300	400	600	700	800	900	1000	1100
	100	100	100	100	100	100	100	100
2200	300	400	600	800	900	1000	1200	1300
		250	350	400	500	500	600	600
2000	-	400	600	800	900	1100	1300	1400
	-	-	350	500	600	700	900	1100
1800	-	-	600	800	900	1100	1400	1500
	-	-	-	600	900	900	1000	1100
1600	-	-	500	800	900	1100	1400	1500
	-	-	-	500	900	900	1000	1300
1400	-	-	-	800	900	1100	1400	1500
	-	-	-	100	800	900	1000	1300
1200	-	-	-	700	900	1100	1400	1500
	-	-	-	-	500	900	1000	1400
1000	-	-	-	-	800	1000	1400	1500
	-	-	-	-	300	900	1000	1400
800	-	-	-	-	600	900	1300	1500
	-	-	-	-	-	600	900	1300
600	-	-	-	-	-	800	1300	1400
	-	-	-	-	-	-	500	1200
400	-	-	-	-	-	400	1200	1400
	-	-	-	-	-	-	300	1200
	Values for high risk				Values for low risk			

Part Description Index

1/4" Hex Bit With Ball End ..... EQC 1005_ ..... Page 189
270° Corner Piece ..... CAN 4503 ..... Page 147
90° Corner Piece ..... CAN 4501 ..... Page 146
90° Safety Fence Fastener ..... TIN 4521 ..... Page 149
Adapter ..... MAT 903_ ..... Page 131
Allen Key For Hex Socket Head Cap Screws ..... EQC 1001_ ..... Page 188
Allround Double Door ..... SAD 2083 ..... Page 110
Allround Panel Special Width ..... SAE ____ ..... Page 107
Allround Panel Standard Width ..... SAE ____ ..... Page 106
Allround Post ..... SAP 4180 ..... Page 108
Allround Single Door ..... SAS 1044 ..... Page 109
Allround Sliding Door ..... SAF 0872 ..... Page 111
Allround System ..... Page 104
Allround System Dimensions ..... Page 105
Aluminum Cover Extrusion ..... CAL 4545 ..... Page 179
Anchor Bolt ..... BAP 2900 ..... Page 182
Angle Fastener 45° ..... GUS 4541 ..... Page 79
Angle Plug With Cable ..... LIN 8312 ..... Page 169
Anti-Reverse For Roller Track ..... MAT 4575 ..... Page 125
Anti-Slip Profile ..... CAL 4560 ..... Page 180
Base And Transport Plate ..... BAP_0__ ..... Page 183
Basic Double Door ..... SBD 2083 ..... Page 101
Basic Panel Special Width ..... SBE ____ ..... Page 99
Basic Panel Standard Width ..... SBE ____ ..... Page 98
Basic Single Door ..... SBS 1044 ..... Page 100
Basic Sliding Door ..... SBF 0872 ..... Page 102
Basic System ..... Page 96
Basic System Dimensions ..... Page 97
Belt Conveyor 40 ..... C4N ..... Page 16
Belt Conveyor 50 ..... C5N ..... Page 18
Belt Conveyor 80 ..... C8N ..... Page 20
Belt Conveyor Drive Options ..... C4N ..... Page 14
Belt Conveyor Drive Options ..... C5N ..... Page 14
Belt Conveyor Drive Options ..... C8N ..... Page 15
Bolt ..... SSP 4900 ..... Page 152
Brake For Roller Track ..... MAT 4580 ..... Page 124
Cable Block ..... PIN 4530 ..... Page 175
Carriage Plate ..... LIN 1501 / LIN 2001 ..... Page 168
Castor With Bolt Hole Fitting ..... CAS _08_ ..... Page 187
Castor With Plate ..... CAS _08_ ..... Page 186
Centering Guide ..... DOR 4571 ..... Page 160
Clamping Device ..... PIN 452_ ..... Page 144
Compact System Options ..... Page 116
Connection Hub ..... COP 4501 ..... Page 140
Connection Shaft With Couplings ..... COL 52_0 ..... Page 173
Conveyor Stand 40 ..... C4G ..... Page 36
Conveyor Stand 40/50 ..... C4F ..... Page 22
Conveyor Stand 80 ..... C8F ..... Page 23
Conveyor Stand 80 ..... C8G ..... Page 37
Conveyor Technology Accessories ..... Page 136
Corner Bracket 100 ..... GUS 100_ ..... Page 87
Corner Bracket 100, one side centered ..... GUS 110_ ..... Page 87
Corner Bracket 40/50 ..... GUS 450_ ..... Page 85
Coupling ..... LIN 523_ ..... Page 170
Cover Extrusion For PIL 4012 ..... CAL 4012 ..... Page 174
Cover/Insert Extrusion ..... CAL 45__ ..... Page 178
Curved Modular Belt Conveyor Drive Options ..... C8M ..... Page 25
Curved Modular Belt Conveyors ..... C8M ..... Page 28
Deflection Calculations ..... Page 197
Design MBS PickStar Rolling - Compact ..... Page 118
Design MBS PickStar Rolling - Ergonomic ..... Page 119
Design MBS PickStar Sliding - Round ..... Page 126
Design MBS PickStar Sliding - Square ..... Page 127

Part Description Index

Door Catch	DOR 4553	Page	155
Door Latch	DOR 4551	Page	154
Door Stop	DOR 4555	Page	156
Door Support Castor	DOR 456_	Page	162
Double Idler	LIN 501_	Page	166
Drive Technology		Page	41
Driveshaft/Encoder Shaft	LIN 52__	Page	171
Drop-in Nut	TIN 45__	Page	88
Elbow Joint 40	GUS 4_41	Page	79
Encoder	LIN 750_	Page	172
End Cap	CAP ____	Page	175
End Cap For Round Tube 30x2	CAP 3002	Page	132
End-to-End Fastener 40x40	FAS 4051	Page	78
End-To-End Fastener 50x50	FAS 5061	Page	83
Ergonomic System Options		Page	116
Expanding Coupling	LIN 5246	Page	172
Extrusion 100x100	PIL 1010	Page	74
Extrusion 100x200	PIL 1020	Page	74
Extrusion 16x40	PIL 1640	Page	68
Extrusion 25x200	PIL 2520	Page	75
Extrusion 40x120	PIL 4012	Page	71
Extrusion 40x40	PIL 4040	Page	68
Extrusion 40x80	PIL 4080	Page	69
Extrusion 50x100	PIL 5010	Page	72
Extrusion 50x200	PIL 5020	Page	73
Extrusion 50x50	PIL 5050	Page	72
Extrusion 80x80	PIL 8080	Page	69
Extrusion Adapter	MAT 403_	Page	130
Extrusion Tolerances		Page	196
Fastener 100x200	FAS 102_	Page	84
Fastener 16x40	FAS 1641	Page	76
Fastener 40x40	FAS 404_	Page	76
Fastener 40x80	FAS 408_	Page	77
Fastener 50x50	FAS 505_	Page	80
Fastener Loads		Page	198
Fine-Tuning And Fixing Element	TIN 4501	Page	176
Fixing Bracket 35x25	GUS 4651	Page	86
Floor Catch	DOR 4561	Page	163
Front Part	MAT 455_	Page	123
Gasket	CAL 4565	Page	181
General Modular Accessories		Page	137
Guiderail	DOL 4034	Page	159
Guiderail	LIL 5000	Page	167
Handle	DOR 4501	Page	153
Hinge	DOR 4511	Page	157
Inserter	TIN 9990	Page	88
Label Holder 50x100	MAT 3050	Page	133
Lean Line Extrusion 40x40	PIL 4140	Page	70
Lean Line Extrusion 40x80	PIL 4180	Page	70
Leveling Base M10	BAS __10	Page	184
Leveling Base M20	BAS 1_20	Page	185
Leveling Base M8	BAS __08	Page	184
Limit Stop	LIN 5191	Page	168
Linear Motion Design		Page	58
Linear Motion System		Page	59
Linear Motion System Accessories		Page	137
Linear Motion System Assembly Tips		Page	193
Linear Motion System Calculations		Page	194
Linear Motion System Carriage Combination Examples		Page	192
Linear Motion System Description Key		Page	192
Linear Motion System Dimensions		Page	192
Linear Motion System Load Capacity		Page	193
Linear Motion Unit 100	LIL 1010	Page	61
Linear Motion Unit 50	LIL 5010	Page	60

Part Description Index

Linear Motion Unit 50 With Omega Drive	LOL 5010	Page	62
Linear Motion Unit and Lift Application Examples		Page	63
Linear Slider	LIN 404_ / LIN 505_	Page	177
Magnet Holder	DOR 4541	Page	153
MBS PickStar Rolling		Page	116
MBS PickStar Rolling - Compact		Page	118
MBS PickStar Rolling - Ergonomic		Page	119
MBS PickStar Sliding		Page	117
MBS PickStar Sliding - Round		Page	126
MBS PickStar Sliding - Square		Page	127
Mesh Retainer	SSP 4515	Page	143
Miter Fastener	TIN 4545	Page	91
Motor Flange	LIN 5241	Page	170
Panel Profile	CAL 451_	Page	145
Panels	PAN ____	Page	142
Plastic Hook	PIN 4590	Page	176
Power Supply 24V	SUL 2000	Page	139
Power Supply 400V	CCL 00__	Page	138
Powered Roller Conveyor Curved	R5C	Page	43
Powered Roller Conveyor Modules		Page	40
Powered Roller Conveyor Straight	R5S	Page	42
Proximity Switch	LIN 8310	Page	169
Proximity Switch Bracket	LIN 8201	Page	169
Roller	DOR 4031	Page	159
Roller Conveyor Stand	R5F	Page	46
Roller Conveyor Stand	R5G	Page	47
Roller Track	MA_ 456_	Page	120
Roller Track With Side Guides	MA_ 459_	Page	121
Round System Options		Page	117
Round Tube 30x2	PIL 3002	Page	132
Safety Distances for Safety Systems		Page	199
Safety Fence Accessories		Page	136
Safety Fence Application Examples		Page	103
Safety Fence Fastener	TIN 4511	Page	148
Safety Fence Floor Bracket	BAP 205_	Page	182
Safety Interlock	DOR 458_	Page	158
Safety Slide	DOR 4557	Page	156
Screw Retainer	SSP 5500	Page	152
Side Guide Base	COP 4561	Page	50
Side Guide Clamp With Rod	CO_ 900_	Page	51
Side Guide Clip	COP 4570	Page	52
Side Guide End Piece	COP 4590	Page	52
Side Guide Plastic	COL 4590	Page	53
Side Guide System for Belt, Timing Belt and Modular Belt Conveyors		Page	48
Side Guide System for Powered Roller Conveyors		Page	49
Single Idler	LIN 500_	Page	166
Single-Sided Fastener 50x50	FAS 505_	Page	81
Slider	DOR 4573	Page	161
Sliding Door Stop	DOR 4032	Page	160
Sliding Rail	MAL 453_	Page	128
Special Fastener	TIN _000	Page	91
Speed Controller	CCN 0004	Page	139
Splined Shaft	COL 8500	Page	141
Square System Options		Page	117
Standard Screw Drawing		Page	197
Straight Modular Belt Conveyor Drive Options	C8M	Page	24
Straight Modular Belt Conveyors	C8M	Page	26
Surface Fastener 40x40	FAS 4049	Page	78
Surface Fastener 50x50	FAS 5059	Page	82
T-Nut	TIN 60__	Page	89
T-Nut Bar	TIN _000	Page	90
T-Nut In-Line Fastener	TIN 0171	Page	90
T-Slot Sliding Rail	CAL 4540	Page	179

Part Description Index

Tilt Plate 80 ..... TIN 4561 ..... Page 150
Tilt Plate 80 Bent ..... TIN 4571 ..... Page 151
Timing Belt ..... LIL 3008 ..... Page 165
Timing Belt Clamp ..... LIN 3221 ..... Page 165
Timing Belt Conveyor 40 ..... C4T ..... Page 32
Timing Belt Conveyor 80 ..... C8T ..... Page 34
Timing Belt Conveyor Drive And Connection Options ..... C4T ..... Page 30
Timing Belt Conveyor Drive And Connection Options ..... C8T ..... Page 31
Timing Belt Pulley ..... LIN 5400 ..... Page 164
Torsion Calculations ..... Page 197
Transfer Unit 90° ..... R5T ..... Page 44
Tube Adapter ..... MAT 303_ ..... Page 129
Tube Clamp Front ..... MAT 30_1 ..... Page 122
Turntable ..... R5R ..... Page 45
Weld Mesh ..... PAN ____ ..... Page 142
Weld Mesh Clip ..... SSP 4520 ..... Page 143
Wrench ..... LIN 9990 ..... Page 167
Zero Pressure Accumulation ..... Page 41

Part Number Index

	Allround System	Page	104
	Allround System Dimensions	Page	105
BAP_0__	Base And Transport Plate	Page	183
BAP 205_	Safety Fence Floor Bracket	Page	182
BAP 2900	Anchor Bolt	Page	182
BAS 1_20	Leveling Base M20	Page	185
BAS __08	Leveling Base M8	Page	184
BAS __10	Leveling Base M10	Page	184
	Basic System	Page	96
	Basic System Dimensions	Page	97
C4F	Conveyor Stand 40/50	Page	22
C4G	Conveyor Stand 40	Page	36
C4N	Belt Conveyor 40	Page	16
C4N	Belt Conveyor Drive Options	Page	14
C4T	Timing Belt Conveyor 40	Page	32
C4T	Timing Belt Conveyor Drive And Connection Options	Page	30
C5N	Belt Conveyor 50	Page	18
C5N	Belt Conveyor Drive Options	Page	14
C8F	Conveyor Stand 80	Page	23
C8G	Conveyor Stand 80	Page	37
C8M	Curved Modular Belt Conveyor Drive Options	Page	25
C8M	Curved Modular Belt Conveyors	Page	28
C8M	Straight Modular Belt Conveyor Drive Options	Page	24
C8M	Straight Modular Belt Conveyors	Page	26
C8N	Belt Conveyor 80	Page	20
C8N	Belt Conveyor Drive Options	Page	15
C8T	Timing Belt Conveyor 80	Page	34
C8T	Timing Belt Conveyor Drive And Connection Options	Page	31
CAL 45__	Cover/Insert Extrusion	Page	178
CAL 451_	Panel Profile	Page	145
CAL 4012	Cover Extrusion For PIL 4012	Page	174
CAL 4540	T-Slot Sliding Rail	Page	179
CAL 4545	Aluminum Cover Extrusion	Page	179
CAL 4560	Anti-Slip Profile	Page	180
CAL 4565	Gasket	Page	181
CAN 4501	90° Corner Piece	Page	146
CAN 4503	270° Corner Piece	Page	147
CAP 3002	End Cap For Round Tube 30x2	Page	132
CAP ____	End Cap	Page	175
CAS _08_	Castor With Bolt Hole Fitting	Page	187
CAS _08_	Castor With Plate	Page	186
CCL 00__	Power Supply 400V	Page	138
CCN 0004	Speed Controller	Page	139
CO_ 900_	Side Guide Clamp With Rod	Page	51
COL 52_0	Connection Shaft With Couplings	Page	173
COL 4590	Side Guide Plastic	Page	53
COL 8500	Splined Shaft	Page	141
	Compact System Options	Page	116
	Conveyor Technology Accessories	Page	136
COP 4501	Connection Hub	Page	140
COP 4561	Side Guide Base	Page	50
COP 4570	Side Guide Clip	Page	52
COP 4590	Side Guide End Piece	Page	52
	Deflection Calculations	Page	197
	Design MBS PickStar Rolling - Compact	Page	118
	Design MBS PickStar Rolling - Ergonomic	Page	119
	Design MBS PickStar Sliding - Round	Page	126
	Design MBS PickStar Sliding - Square	Page	127
DOL 4034	Guiderail	Page	159
DOR 456_	Door Support Castor	Page	162
DOR 458_	Safety Interlock	Page	158
DOR 4031	Roller	Page	159
DOR 4032	Sliding Door Stop	Page	160

Part Number Index

DOR 4501 ..... Handle ..... Page 153
DOR 4511 ..... Hinge ..... Page 157
DOR 4541 ..... Magnet Holder ..... Page 153
DOR 4551 ..... Door Latch ..... Page 154
DOR 4553 ..... Door Catch ..... Page 155
DOR 4555 ..... Door Stop ..... Page 156
DOR 4557 ..... Safety Slide ..... Page 156
DOR 4561 ..... Floor Catch ..... Page 163
DOR 4571 ..... Centering Guide ..... Page 160
DOR 4573 ..... Slider ..... Page 161
..... Drive Technology ..... Page 41
EQC 1001_ ..... Allen Key For Hex Socket Head Cap Screws ..... Page 188
EQC 1005_ ..... 1/4" Hex Bit With Ball End ..... Page 189
..... Ergonomic System Options ..... Page 116
..... Extrusion Tolerances ..... Page 196
FAS 102_ ..... Fastener 100x200 ..... Page 84
FAS 404_ ..... Fastener 40x40 ..... Page 76
FAS 408_ ..... Fastener 40x80 ..... Page 77
FAS 505_ ..... Fastener 50x50 ..... Page 80
FAS 505_ ..... Single-Sided Fastener 50x50 ..... Page 81
FAS 1641 ..... Fastener 16x40 ..... Page 76
FAS 4049 ..... Surface Fastener 40x40 ..... Page 78
FAS 4051 ..... End-to-End Fastener 40x40 ..... Page 78
FAS 5059 ..... Surface Fastener 50x50 ..... Page 82
FAS 5061 ..... End-To-End Fastener 50x50 ..... Page 83
..... Fastener Loads ..... Page 198
..... General Modular Accessories ..... Page 137
GUS 4_41 ..... Elbow Joint 40 ..... Page 79
GUS 100_ ..... Corner Bracket 100 ..... Page 87
GUS 110_ ..... Corner Bracket 100, one side centered ..... Page 87
GUS 450_ ..... Corner Bracket 40/50 ..... Page 85
GUS 4541 ..... Angle Fastener 45° ..... Page 79
GUS 4651 ..... Fixing Bracket 35x25 ..... Page 86
LIL 1010 ..... Linear Motion Unit 100 ..... Page 61
LIL 3008 ..... Timing Belt ..... Page 165
LIL 5000 ..... Guiderail ..... Page 167
LIL 5010 ..... Linear Motion Unit 50 ..... Page 60
LIN 52__ ..... Driveshaft/Encoder Shaft ..... Page 171
LIN 404_ / LIN 505_ ..... Linear Slider ..... Page 177
LIN 500_ ..... Single Idler ..... Page 166
LIN 501_ ..... Double Idler ..... Page 166
LIN 523_ ..... Coupling ..... Page 170
LIN 750_ ..... Encoder ..... Page 172
LIN 1501 / LIN 2001 ..... Carriage Plate ..... Page 168
LIN 3221 ..... Timing Belt Clamp ..... Page 165
LIN 5191 ..... Limit Stop ..... Page 168
LIN 5241 ..... Motor Flange ..... Page 170
LIN 5246 ..... Expanding Coupling ..... Page 172
LIN 5400 ..... Timing Belt Pulley ..... Page 164
LIN 8201 ..... Proximity Switch Bracket ..... Page 169
LIN 8310 ..... Proximity Switch ..... Page 169
LIN 8312 ..... Angle Plug With Cable ..... Page 169
LIN 9990 ..... Wrench ..... Page 167
..... Linear Motion Design ..... Page 58
..... Linear Motion System ..... Page 59
..... Linear Motion System Accessories ..... Page 137
..... Linear Motion System Assembly Tips ..... Page 193
..... Linear Motion System Calculations ..... Page 194
..... Linear Motion System Carriage Combination Examples ..... Page 192
..... Linear Motion System Description Key ..... Page 192
..... Linear Motion System Dimensions ..... Page 192
..... Linear Motion System Load Capacity ..... Page 193
..... Linear Motion Unit and Lift Application Examples ..... Page 63
LOL 5010 ..... Linear Motion Unit 50 With Omega Drive ..... Page 62

Part Number Index

MA_ 456_ ..... Roller Track ..... Page 120
MA_ 459_ ..... Roller Track With Side Guides ..... Page 121
MAL 453_ ..... Sliding Rail ..... Page 128
MAT 30_1 ..... Tube Clamp Front ..... Page 122
MAT 303_ ..... Tube Adapter ..... Page 129
MAT 403_ ..... Extrusion Adapter ..... Page 130
MAT 455_ ..... Front Part ..... Page 123
MAT 903_ ..... Adapter ..... Page 131
MAT 3050 ..... Label Holder 50x100 ..... Page 133
MAT 4575 ..... Anti-Reverse For Roller Track ..... Page 125
MAT 4580 ..... Brake For Roller Track ..... Page 124
..... MBS PickStar Rolling ..... Page 116
..... MBS PickStar Rolling - Compact ..... Page 118
..... MBS PickStar Rolling - Ergonomic ..... Page 119
..... MBS PickStar Sliding ..... Page 117
..... MBS PickStar Sliding - Round ..... Page 126
..... MBS PickStar Sliding - Square ..... Page 127
PAN ____ ..... Panels ..... Page 142
PAN ____ ..... Weld Mesh ..... Page 142
PIL 1010 ..... Extrusion 100x100 ..... Page 74
PIL 1020 ..... Extrusion 100x200 ..... Page 74
PIL 1640 ..... Extrusion 16x40 ..... Page 68
PIL 2520 ..... Extrusion 25x200 ..... Page 75
PIL 3002 ..... Round Tube 30x2 ..... Page 132
PIL 4012 ..... Extrusion 40x120 ..... Page 71
PIL 4040 ..... Extrusion 40x40 ..... Page 68
PIL 4080 ..... Extrusion 40x80 ..... Page 69
PIL 4140 ..... Lean Line Extrusion 40x40 ..... Page 70
PIL 4180 ..... Lean Line Extrusion 40x80 ..... Page 70
PIL 5010 ..... Extrusion 50x100 ..... Page 72
PIL 5020 ..... Extrusion 50x200 ..... Page 73
PIL 5050 ..... Extrusion 50x50 ..... Page 72
PIL 8080 ..... Extrusion 80x80 ..... Page 69
PIN 452_ ..... Clamping Device ..... Page 144
PIN 4530 ..... Cable Block ..... Page 175
PIN 4590 ..... Plastic Hook ..... Page 176
..... Powered Roller Conveyor Modules ..... Page 40
R5C ..... Powered Roller Conveyor Curved ..... Page 43
R5F ..... Roller Conveyor Stand ..... Page 46
R5G ..... Roller Conveyor Stand ..... Page 47
R5R ..... Turntable ..... Page 45
R5S ..... Powered Roller Conveyor Straight ..... Page 42
R5T ..... Transfer Unit 90° ..... Page 44
..... Round System Options ..... Page 117
SAD 2083 ..... Allround Double Door ..... Page 110
SAE ____ ..... Allround Panel Special Width ..... Page 107
SAE ____ ..... Allround Panel Standard Width ..... Page 106
SAF 0872 ..... Allround Sliding Door ..... Page 111
..... Safety Distances for Safety Systems ..... Page 199
..... Safety Fence Accessories ..... Page 136
..... Safety Fence Application Examples ..... Page 103
SAP 4180 ..... Allround Post ..... Page 108
SAS 1044 ..... Allround Single Door ..... Page 109
SBD 2083 ..... Basic Double Door ..... Page 101
SBE ____ ..... Basic Panel Special Width ..... Page 99
SBE ____ ..... Basic Panel Standard Width ..... Page 98
SBF 0872 ..... Basic Sliding Door ..... Page 102
SBS 1044 ..... Basic Single Door ..... Page 100
..... Side Guide System for Belt, Timing Belt and Modular Belt Conveyors ..... Page 48
..... Side Guide System for Powered Roller Conveyors ..... Page 49
..... Square System Options ..... Page 117
SSP 4515 ..... Mesh Retainer ..... Page 143
SSP 4520 ..... Weld Mesh Clip ..... Page 143

Part Number Index

SSP 4900	Bolt	Page	152
SSP 5500	Screw Retainer	Page	152
	Standard Screw Drawing	Page	197
SUL 2000	Power Supply 24V	Page	139
TIN _000	Special Fastener	Page	91
TIN _000	T-Nut Bar	Page	90
TIN 45__	Drop-in Nut	Page	88
TIN 60__	T-Nut	Page	89
TIN 0171	T-Nut In-Line Fastener	Page	90
TIN 4501	Fine-Tuning And Fixing Element	Page	176
TIN 4511	Safety Fence Fastener	Page	148
TIN 4521	90° Safety Fence Fastener	Page	149
TIN 4545	Miter Fastener	Page	91
TIN 4561	Tilt Plate 80	Page	150
TIN 4571	Tilt Plate 80 Bent	Page	151
TIN 9990	Inserter	Page	88
	Torsion Calculations	Page	197
	Zero Pressure Accumulation	Page	41

Notes And Sketch

Notes And Sketch

Notice:
Diagrams, dimensions and technical data in this catalog are for demonstration purposes only and may be revised any time and adapted to meet new requirements.

Robotunits reserves the right to make technical changes and to revise the price structure without notice.
Robotunits is not liable for any printing errors, inaccuracies or mistakes.